This Foundation Plan has not been certified. According to our records it was the one used for this machine. However, we suggest that you check the physical dimensions of the machine against those shown on this Foundation Plan.

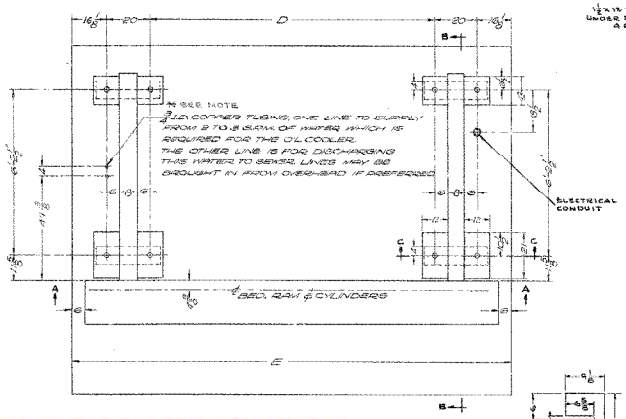

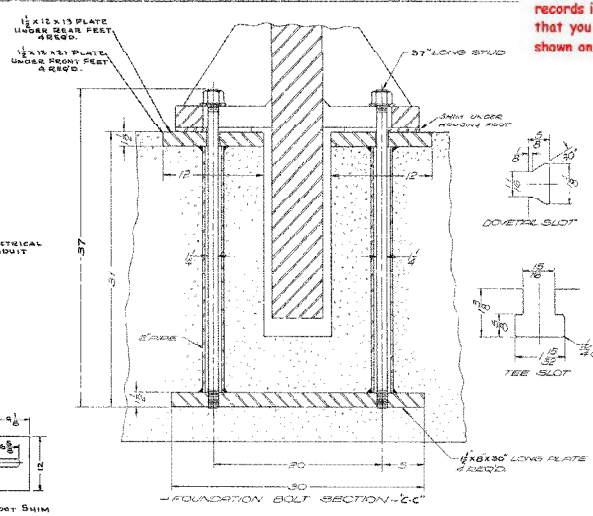

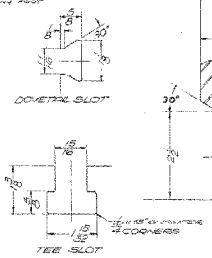

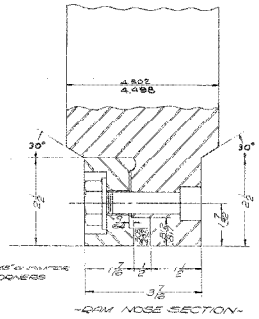

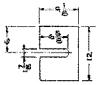

REAR FOOT SHIM

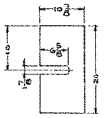

FRONT FOOT SHIM

This Foundation Plan has not been certified. According to our records it was the one used for this machine. However, we suggest that you check the physical dimensions of the machine against those shown on this Foundation Plan.

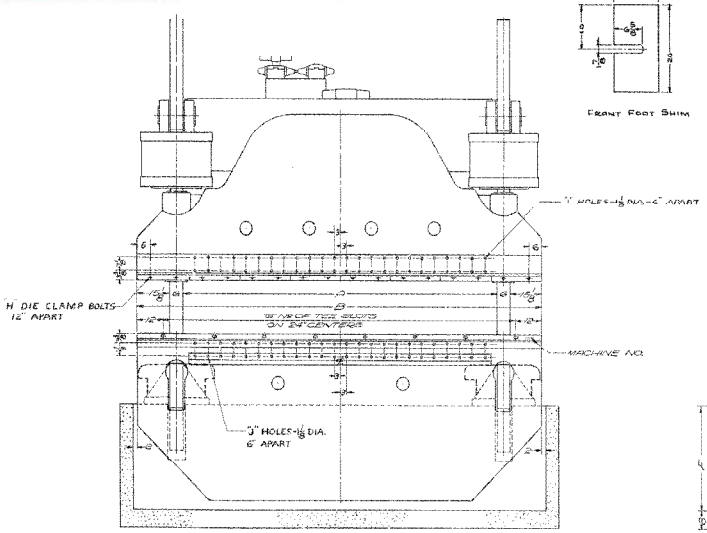

SECTION "A-A"

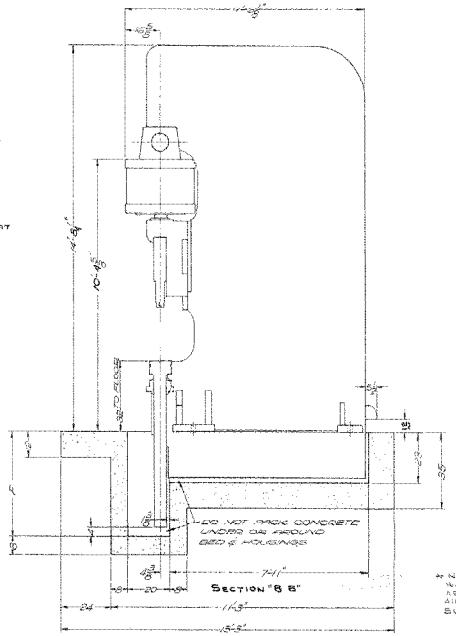

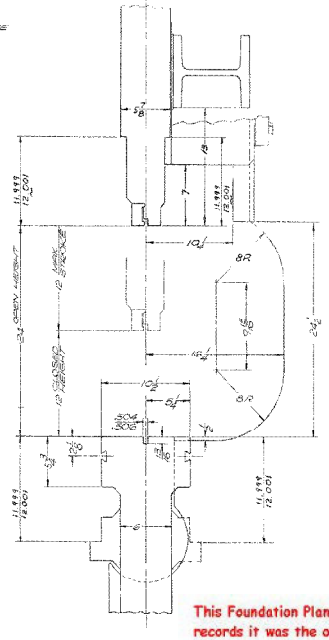

This Foundation Plan has not been certified. According to our records it was the one used for this machine. However, we suggest that you check the physical dimensions of the machine against those shown on this Foundation Plan.

SIZE OF MACHINE	A BED AREA	B DIE SURFACE	D	E	F	G TEE SLOTS	H BOLTS	J
1000H	[redacted]							
X/12	1'-8 3/4"	20'-0"	15'-9 3/4"	21'-4"	6'-8	10	20	64

* NOTE
WATER SUPPLY LINES ARE NOT REQUIRED WHEN AIR TYPE COOLER IS SUPPLIED.

INCLUDES 6 BAGS (94 LBS PER BAG) HIGHEST CONCRETE REMOVABLE WITH STEEL TO FIT EXACT THE BEDPLATE ON 1-8 OF THE HIGHER OF THE GROSS BEARING AREA OF CONCRETE. IT IS THE MINIMUM THICKNESS REQUIRED. LOCAL CONDITIONS MAY DETERMINE DIFFERENT SIZE DEPENDING ON LOCAL SOIL CONDITIONS. CONSULT A LOCAL REGISTERED CIVIL ENGINEER

FOUNDATION PLAN
1000H HYDRAULIC PRESS BRAKE
16' STROKE - 12' STROKE - 12' CLOSED HEIGHT
12" SHOULDERS ON BED & RAM

CINCINNATI
CINCINNATI, OHIO 45216
WAS 407724

408517-F