BETTER ENGINEERING MANUFACTURING, INC.

PURIFIER WASHERS

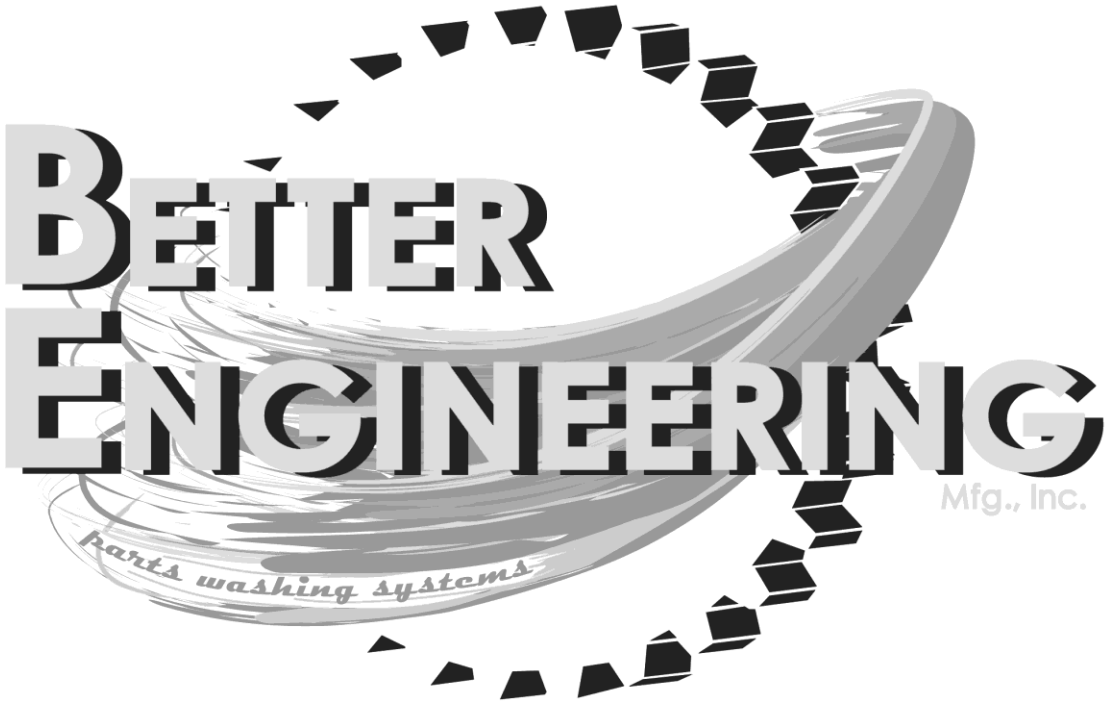

Instruction Manual

Instruction Manual
Purifier Washers
Series F-3000, F-4000, F-5000, F-6000, T-2500, T-5000, T-6000, & T-7000

BETTER ENGINEERING MANUFACTURING, INC
8361 Town Center Court
Baltimore, Maryland 21236
www.betterengineering.com

TABLE OF CONTENTS

Chapter 1

1

WARRANTY POLICY

Better Engineering products are backed by many years of experience in the manufacture of shop equipment. Every piece of equipment bearing the name Better Engineering is sold with the following warranty:

Products warranted to be free from defects in workmanship and material for a period of one year from the date of shipment provided that a written claim for such defect is made within that time.

This warranty does not cover damage or defects caused by carelessness of the operator, misuse, abuse, abnormal use which in any way impairs the proper function of the equipment, or by the use/addition of parts not manufactured by Better Engineering or its suppliers.

Proper steps have been taken to provide protection against injuries to operators of Better Engineering equipment. This company cannot be held responsibility for injury, either personal or property, sustained through the operation of use of Better Engineering equipment.

THIS WARRANTY IS EXPRESSLY MADE IN LIEU OF ANY AND ALL OTHER WARRANTIES EXPRESSED OR IMPLIED INCLUDING THE WARRANTIES OF MERCHANTABILITY AND FITNESS FOR A PARTICULAR PURPOSE.

If your Better Engineering washer is not functioning properly, call your Better Engineering dealer immediately. Under your one (1) year warranty protection plan, repairs are made at no charge by your local dealer. On some occasions, an independent contractor may be hired to do the repairs. Within the warranty period, a customer should not hire his own contractor unless it is authorized in writing by a Better Engineering dealer or the factory.

If it is necessary to return equipment for repairs, your dealer will so advise you. When returning equipment for repairs, empty and thoroughly clean out the tank, see that machines are properly crated and protected, and prepay transportation.

Defective parts replaced at no charge must be returned to your dealer or Better Engineering within 60 days of the date that the replacement parts are shipped, otherwise, you must pay for the replacement parts at current selling prices.

PRECAUTIONS

Read this entire manual before attempting to install your Better Engineering washer.

CAUTION:

1. Your machine uses **HIGH VOLTAGE** electricity. Obtain the services of a licensed electrician for all electric work.

2. Do not use any petroleum base chemical or solvent, or any flammable products in your jet washer.

3. Heating elements will be ruined and the pump/motor may be damaged if they are turned on when the holding tank is empty or has a low water level. Check the water level at least daily. Clean the chip basket regularly so water can return to the holding tank.

4. Cleaning will be poor and the heating elements and pump motor may get damaged if the machine is not cleaned according to instructions.

5. If your jet washer is made with mild steel, it will rust unless you use the correct detergent and follow the correct start-up procedure. If you are not using a Better Engineering detergent, make sure the brand you are using is safe on mild steel and has an adequate concentration of rust inhibitors. The supplier of your detergent should be able to supply this information.

6. When installing the unit, do not fill the tank with water unless you have the time needed to heat the water to 160° - 180°F, add the detergent, and run the wash cycle for at least two (2) hours to coat the steel with rust inhibitor. Again, read this entire manual before starting the installation so that you know what is involved. (See "Chemical Selection")

7. If your machine has a custom feature such as gas heat, make sure an addendum was enclosed with this manual explaining the operation of the custom feature.

8. Do not use the washer if the door safety switch does not stop the wash pump when the door is opened.

9. Laws and regulations change and vary by region. The remarks in this section should only be construed only as a general guideline. It is your responsibility to research, understand, and follow the exact environmental regulations of your region. Protect your environment and protect your business from fines by handling your dirty cleaning solution according to federal, state, and local codes. According to federal regulations, which states have to adopt as minimum standards, the dirty cleaning solutions in a spray washer generally are not "hazardous wastes".

To be considered a hazardous waste by the U.S. Government, the solution has to have one or more of the following (4) characteristics:

A) IGNITABILITY- A waste is hazardous if it is a liquid and a representative sample has a flashpoint less than 140°F.

B) CORROSIVITY- A solid waste is hazardous if it is an aqueous solution and a representative sample has a pH less than or equal to 2 or greater than or equal to 12.5

C) REACTIVITY- A solid waste is hazardous if a representative sample reacts violently with water or releases cyanide or hydrogen sulfide when exposed to low pH solutions.

D) EP TOXICITY- A solid waste is hazardous if a representative sample leaches heavy metals in concentrations greater than 100 times primary drinking water standard concentrations.

The two characteristics of most concern are corrosivity and EP toxicity. The detergent supplier can advise if the pH of the solution is greater than 12.5 and if so, how it can be neutralized with acid. To check for EP Toxicity, a sample should be sent to a laboratory for testing.

Assuming that your solution is not hazardous, the EPA does not require special storage, documentation, transportation, and processing. However, since your solution will have oils, you will probably not be able to dump the solution in the sewage line (call your sewage treatment facility) and you cannot dump the solution on the ground or in a storm drain.

Given the above information, the best approach is to clean or filter the solution so that the water content can be continually reused. A dirty solution separates into three (3) layers: oils rise to the top, sludge sits on the tank bottom, and the water layer is in the middle. The surface oils, which are skimmed off with the OSW-11 skimmer, can generally be stored with your other waste oils. The sludge can be occasionally removed and stored as "hazardous" waste to be conservative.

CHEMICAL SELECTION

CAUTION: Most Better Engineering detergents are characterized as "generally safe" on most metals. This is not an absolute guarantee. If the parts are critical, it is the customer's responsibility to perform any and all metallurgical tests.

CAUTION: Better Engineering does not warranty their product against rust. Rust will occur if the wrong detergent is used, if the start-up procedure is not followed, or if the machine is not used on a regular basis (should oil the inside). Rust can also occur if you use de-ionized water for rinsing.

Using the correct detergent is critical to the performance and longevity of your washer. For mild steel units, the detergent must be formulated to meet the following criteria:

- The detergent must have rust inhibiting agents to protect the mild steel machine and your steel parts. Once rusting starts, it can be difficult to stop.
- The detergent should be strong enough to remove the contaminants, but not so strong that it attacks the metal substrate.
- The detergent should only leave an acceptable amount of residue on the parts. For new parts in particular, you may need a detergent that is "free rinsing".
- To be used in a washer, the detergent needs to be "low foaming".

To ensure the satisfaction of our customers, Better Engineering has developed its' own line of detergents and additives. The products we offer are:

- **PDN-50 Powder**

  Gives you the maximum amount of cleaning power without being "caustic". Generally safe on all metals (could tarnish brass and copper), PDN-50 removes oils, greases, and even light carbon deposits. PDN-50 will generally prevent rust on steel parts for 2-5 days.

- **HDL-125 Liquid**

  A free-rinsing, low-foaming, heavy duty liquid detergent typically used to clean industrial equipment parts, engine parts and screw machine parts

- **LDA-445 Liquid**

  This free rinsing, liquid detergent will shear off oils and leave the surface of your parts virtually spotless. LDA-445 is ideal for metal working centers where contamination is light and cosmetics are critical. Generally safe on all metals, LDA-445 contains an amine ingredient for 1-2 day rust inhibition.

- **RPA-445 Rust Inhibitor**

  This amine based product can be added to LDA-445 detergent for extra rust protection (2-5 days).

- **DFS-211 Defoamer**

  If the contaminants on the parts cause foaming, this product can be added to reduce foaming.

  .

Chapter 2

2

MACHINE DESCRIPTION

Your Purifier washer consists of a complete system to provide a heated wash stage. The wash system has its own heated holding tank, temperature control, pump, and manifold. A turntable holds the part to be cleaned and rotates throughout the cleaning cycle to expose all surfaces of the part to the spray. An optional steam exhaust blower removes the generated water vapor from the wash chamber.

An optional Level sensor system can monitor the tank water level and control the operation of the fill solenoid valve.

The wash stage automatically cleans parts by spraying them with a re-circulated hot detergent and water solution. During the cleaning cycle, the parts rotate through spray curtains which are created by spray nozzles located above, below, and outside the turntable. The force of the spray jets, in combination with the heat and the chemical action of the detergent, will remove contaminants within minutes.

Your jet washer has the "Purifier" filtration system that encompasses all the design elements essential to solution longevity and easy contaminant removal. After wash solution hits the parts, it flows through a removable stainless "chip" basket. A deflector plate then shunts the solution to the rear of the tank where most of the fine sediment is trapped in a 2" deep trough that spans the width of the machine. A radical floor pitch from front to back forces the sediment toward the rear. An optional bag filter in the wash stream removes small particles (down to 1 micron depending on the filter bag used) to prevent them from being re-deposited on the part.

The oil skimmer system removes oils on the surface by turning a plastic wheel. The oil will cling to the plastic wheel as it is rotating, after which the oil is removed by two scrapers and guided to a dump box. This process will increase the longevity of the solution by keeping it from getting saturated with oils. The controls of this feature will be explained in the Smart Relay section of this manual.

CYCLE DESCRIPTION

The wash, rinse, and dry cycles are controlled by a programmable smart relay that provides operator control through the HMI screen. This allows the end user to preset proper times for each stage for repeatable operations. The Wash stage time can be easily modified from the home screen while the other timers which need to be set just once are stored. Instructions for setting times are included in the "The Seven Day Function" section of this manual.

GENERAL MACHINE LAYOUT

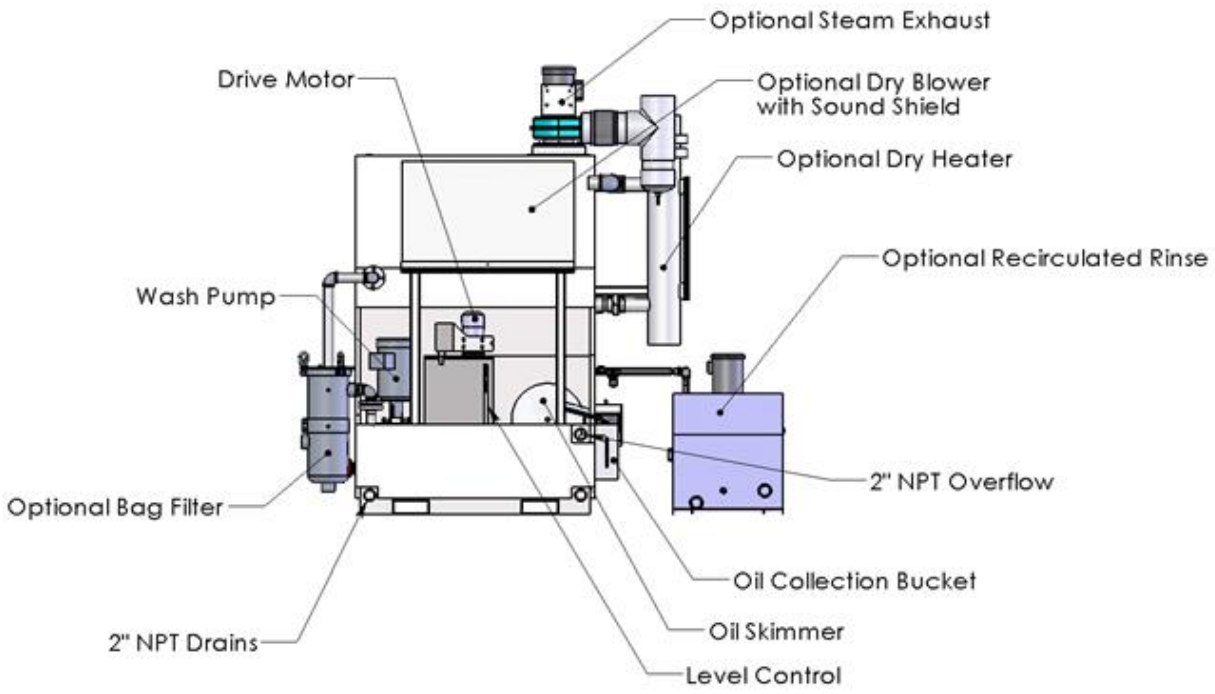

Figure 1: Rear View of F-4000-P

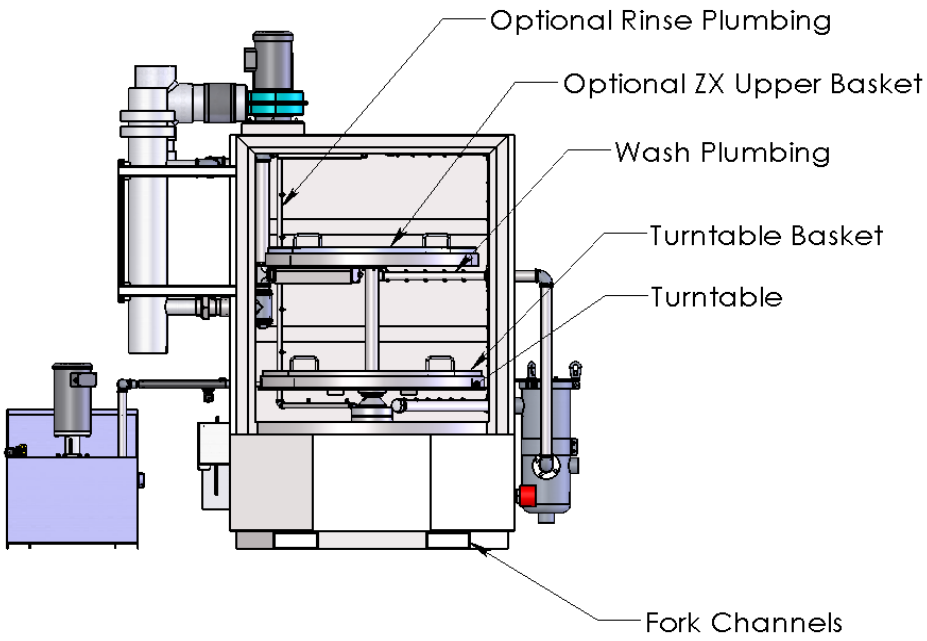

Figure 2: Front view of F-4000-P (door removed)

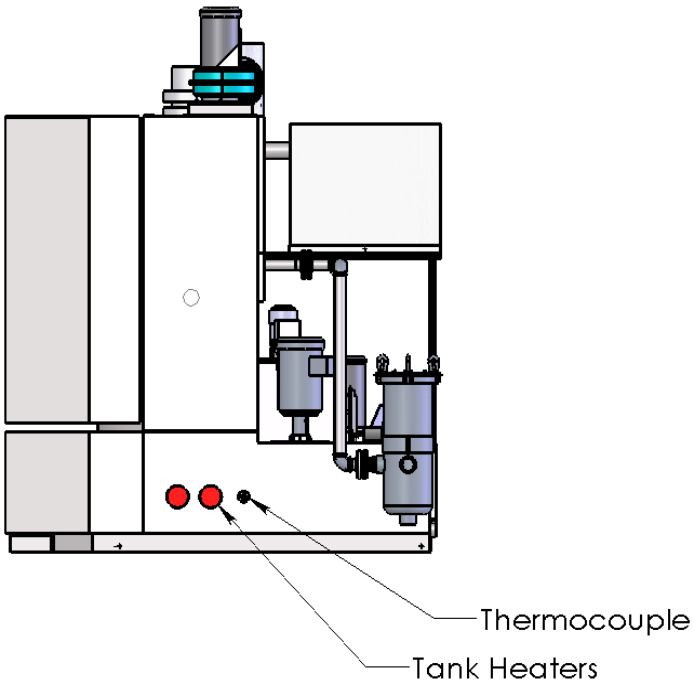

Figure 3: Right side view of F-4000-P

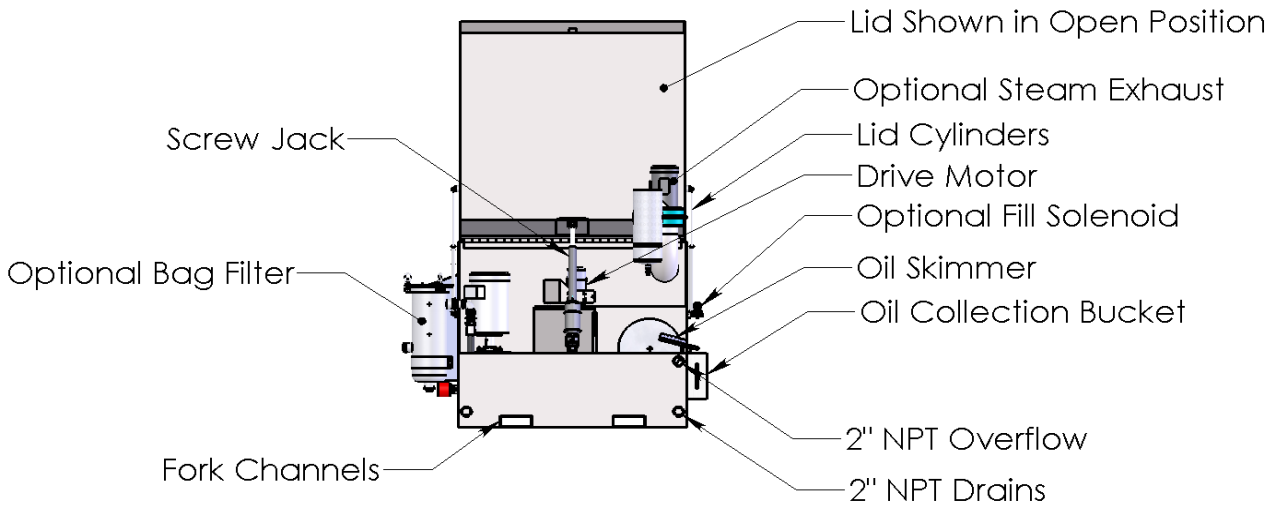

Figure 4: Rear view of T-5000-P

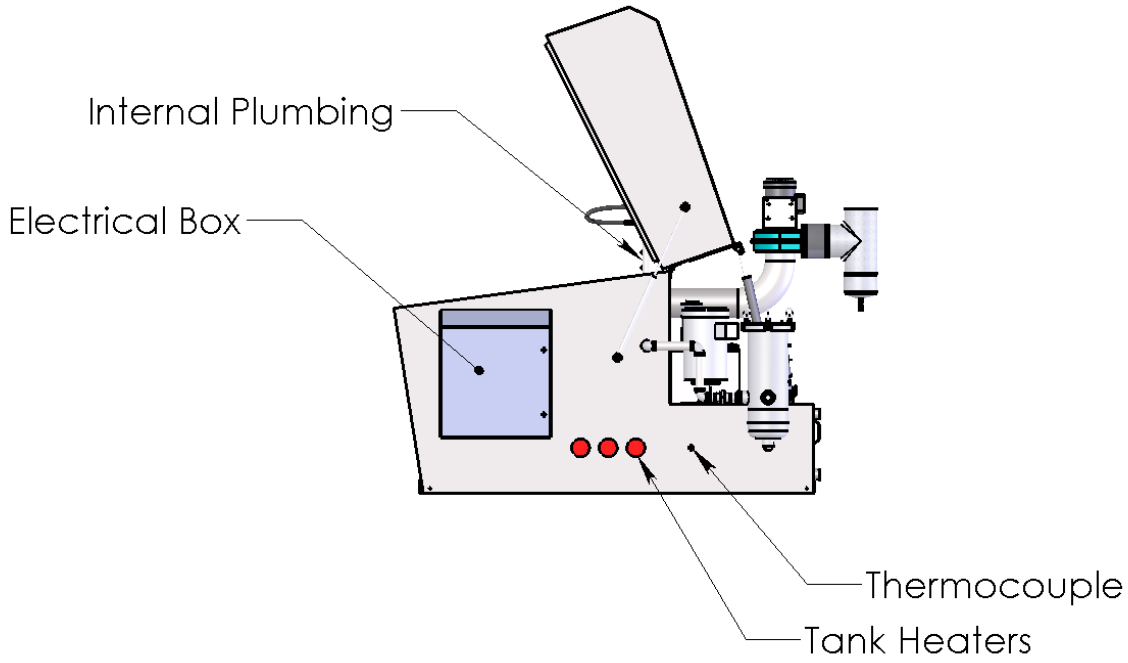

Figure 5: Right side view of T-5000-P

MACHINE OPTIONS

Optional Level Sensor System

The wash water level sensor switch system consists of a float mechanism with two (2) magnetically operated reed switches.

Reed switch 1 is used to signal tank low level alarm that will prevent the machine from running. It must be situated such that fluid level in the tank does not go below the level of the tank heaters. The tank heaters are immersion type heaters and will be damaged if operated without being surrounded by liquid. For this application, a dimension of six (6) inches below the top of the tank is recommended.

Reed switch 2 is used to signal tank full. This is the normal full level of the wash tank. Since its location is fixed with respect to reed switch 1, no adjustment is necessary. The controls for the machine are designed such that tank filling will occur whenever the pump is NOT running and reed switch 1 is not operated by the magnet. In other words, whenever the pump is off and the water level is not up to reed switch #2, the fill solenoid will be energized, permitting water to enter the wash tank until reed switch #2 is closed.

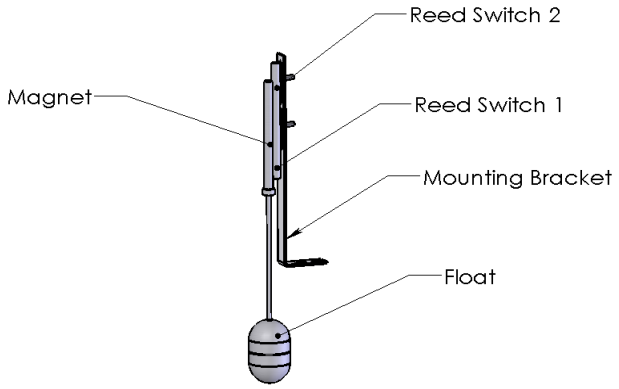

Figure 6: Level sensing system

Tank Heating System

The wash tank is heated by electric heaters. The tank temperatures are controlled through the Smart Relay and can be adjusted through the HMI screen. If the water in the tank is below the low water setting as determined by the float level sensor, the heaters are disabled.

Jog System

A “Jog” pushbutton on the operator panel will rotate the turntable with the door open to facilitate the loading of parts to be cleaned. The pushbutton must be depressed and held to rotate the turntable.

Optional Steam Exhaust System

Three methods of running the steam exhaust can be selected. When the “Auto1” mode is selected the motor starts at the beginning of the cycle and continues to run until the door is opened at the end of the cycle. When the “Auto2” mode is selected the motor starts at the end of the wash stage and continues to run until the door is opened. In the “Off” mode the exhaust stays off. For best results, vent to outdoors. The steam exhaust motor is located on the top of, or behind, the washer.

Optional ARC-11 Fresh Rinse System

If your washer has this option, the parts will automatically be washed and rinsed, diverting the rinse water outside the machine. The actual course of events during the wash-rinse sequence is as follows:

1. During the wash stage, the "rinse diverter port” diverts whatever wash water enter back to the wash tank.

2. After the wash stage, there is a 2 to 3 minute pause or delay period to allow the wash water to fully return to the wash tank.

3. After the delay period, the rinse cycle starts. A solenoid valve opens to allow fresh water into the rinse spray manifolds and the "rinse diverter port" rotates to divert the rinse water outside the machine.

Optional ARC-22 Recirculated Rinse System

If your washer has this option, the parts will automatically be washed and rinsed, diverting the rinse water back to the 50 gallon rinse tank. The actual course of events during the wash-rinse sequence is as follows:

1. During the wash stage, the "rinse diverter port” diverts whatever wash water enters back to the wash tank.

2. After the wash stage, there is a 2 to 3 minute pause or delay period to allow the wash water to return to the wash tank.

3. After the delay period, the rinse cycle starts. Recirculated rinse water is pumped into the rinse spray manifolds and the "rinse diverter port" rotates to divert the rinse water back to the rinse tank.

Chapter 3

3

UTILITIES AND INSTALLATION

Shipping Damage

If any damage is found, notify your carrier immediately and save all crating materials for the carrier's inspector to examine. Failure to promptly report damage could result in denial of your claim. A trucking company's procedure for handling damage claims is as follows:

1. Take photos of any damage
2. Immediately send out an inspector, an inspection report is filled out on the spot, a copy of which is given to the customer.
3. The customer has to call the carrier to request a claim form.
4. The customer mails in the claim form.
5. The claim usually takes two (2) months to process.

If a unit is seriously damaged, your Better Engineering dealer may be able to intervene, requesting that the damaged unit be returned and a new unit delivered. If no damage is found, remove the bolts, which fasten the machine to the skid. The machine is fastened on two or all four corners. Remove the machine from the skid.

Unpacking

To prevent shipping damage some parts may have been packed inside the machine. If you have a "ZX" model, the upper basket and the support structure is packed inside the lower basket. Screw the support fixture into the pipe coupling and position the upper basket. Cut and remove any plastic ties connected to the turntable.

If the OSW-11 oil skimmer is packed in a box, mount it to the machine and connect the yellow plug.

Check for any necessary items ordered like the HAR-11 rinse gun and SPB-11 small parts basket.

Factory water must be supplied to the ½” or 1” inlet of the tank fill solenoids. It is recommended that a water shut-off valve be installed in the pipeline close to the washer.

A two inch (2”) NPT drain connection and a two inch (2”) NPT overflow connection are supplied. They are located on the bottom and top of each tank in the rear. A ball valve should be installed directly to the drain couplers then out to the plant drain. The overflow connection and the Fresh Rinse Drain should be tied into the drain plumbing after the ball valves. Opening the valves at the bottom rear of the tanks will empty the tanks to the plant drain.

The steam exhaust assembly is equipped with a six (6”) inch outlet (4” for the F-3000 Series). The plumbing for the steam should exit the building. For the best results, the plumbing run should be as straight as possible in the up direction with no turns and out through the roof of the building. Plumbing should be able to withstand temperature and moisture up to 180°F. Since there is water vapor and condensation, the plumbing must be sealed at the outlet of the steam exhaust and all joints. If the parts washer cannot be vented to the outside, as a minimum, install a 90 degree elbow to the steam vent. Follow this elbow with a 4 inch long section of straight pipe and then attach another 90 degree elbow with the outlet facing up. PVC pipe is acceptable to use for this application.

Precautions

- **DANGER**: This machine utilizes **high voltage**. Have a certified electrician do all electrical work. Always disconnect power when opening an electric box. See electrical schematic or nameplate for full load amperage (FLA) of machine.
- **CAUTION:** Vibration during shipping could have loosened one or more wire connections. Before connecting power, the electrician should check all screw connections in the control and junction boxes.
- **CAUTION:** The electrician must check rotation of all 3-phase motors and connect power in the electrical box in accordance with the wiring schematic. Ensure that a ground wire is installed on the grounding stud located in the electrical box.
- **CAUTION:** Do not turn on the heaters until the tank is full.
- **CAUTION:** If your machine is not stainless steel, rusting may occur if you use de-ionized (DI) water to rinse. DI water tends to strip the rust inhibitors from mild steel.

Location

Consider the following factors when choosing a location:

- The unit will generate some steam (water vapor). Make sure this steam will have no adverse effects in the surrounding area.
- The process of removing wet parts from the machine will inevitably result in some water or solution spilling onto the floor. Consider traction mats around the machine and avoid placing the machine next to a walkway.
- Allow room for your utility connections and for service. You will need 36” to unscrew the heating elements.
- Make sure the site is level.

Chapter 4

4

INITIAL START-UP

Prior to Applying Power

1. If applicable, check the wash filter and install a filter bag if necessary. After installation, make certain the gasket is in place and the lid is properly seated. Install and tighten the clamp.
2. **Tighten all wires in control box**.
3. Turn on water to the tank fill solenoids.

Applying Main Electrical Power

1. Turn on the main disconnect to apply power to the machine.
2. The screen on the control panel will be active. If not, check the Emergency Stop button.
3. The Water level fault screen will appear.
4. Once the tanks are full, the HMI will go to the Home Screen.
5. Place the Heater Switch to the “ON” position.
6. If this is a Stainless Steel unit then you can run a short cycle to check for motor rotation.
7. If this is a Mild Steel unit then you will need to heat the water and chemical before running to prevent rusting.
8. See section “Screen Functions" on changing wash time value.
9. Check that the pumps are rotating in the correct direction. If the pump is not running in the correct direction, the electrician must reverse two phases of the incoming power wires, at the main disconnect, to cause the pump to run correctly.
10. While each pump is running check that there are no leaks in the plumbing, particularly at the filter flanges.
11. Observe the pressure gauge on the outlet of the filter for proper pressure.

Adding Chemical

On the first time filling the tanks with water the Chemical can be added by removing one of the access plates and pouring the desired amount in.

CAUTION: The wash tank temperature must be above 140° F prior to running the pump with chemical in the tank or foaming may occur.

Running a Normal Cycle

1. Allow the tank temperatures to reach the normal operating temperature.
2. Press the "Cycle Start" pushbutton to start the cycle. The wash pump will start and the Wash Status screen will be displayed.
3. The set time value and the remaining time for each stage will be shown on each screen.
4. When the wash has timed out the pump will stop and the Wash Drain screen will appear showing the set time and the time remaining.
5. A preset drain time occurs to allow the wash water to drain back to the tank before the rinse comes on.
6. When the drain has completed the next stage will begin.
7. When the programmed0 cycle has completed, the screen will display "Cycle Complete".

Chapter 5

5

OPERATOR CONTROL FUNCTIONS

Pushbuttons

- PB1: Emergency Stop – Removes control power from the control portion of the unit except the power to the Smart Relay and HMI.
- PB2: Jog – This button will rotation the turntable as long as the door is open the button is held in.

Switches

- SS1: Heat Selector – This allows the operator to select the mode of operation for the heat.
    - ON: The heat control circuit will be active 24hrs to heat and monitor water temperature.
    - OFF: The heat control circuit will not be active.
    - PROG: The heat control circuit will be active or non-active throughout the day depending on how Program1 is set. See Chapter 2 - Seven Day Timer Function.
- SS2: Skimmer Selector – This allows the operator to select the mode of operation for the Oil Skimmer.
    - ON: The skimmer control circuit will be active 24hrs to heat and monitor water temperature.
    - OFF: The skimmer control circuit will not be active.
    - PROG: The skimmer control circuit will be active or non-active throughout the day depending on how Program1 is set. See Chapter 2 Seven Day Timer Function.
- SS3: Steam Exhaust Selector – This allows the operator to select the mode of operation for the Steam Exhaust.
    - Auto1: The Steam Exhaust will start at the beginning of the wash stage and will remain until the cabinet door is opened.

- Auto2: The Steam Exhaust will start after the last wet stage is completed and stay on until the cabinet door is opened.
- OFF: The Steam Exhaust will not operate.

Lid Operation (For Top Loaders Only)

The lid on these models is powered up and down with an electric screw jack. To open or close the lid, push and hold down the "Lid On" button and either the "Up" or "Down" button. If your finger comes off either button the lid will stop in place.

Watlow Controller

This controller displays the current temperature in green. The set point temperature is displayed in red and can be adjusted with the up and down arrow keys on the temperature controller.

Panel Lights

- LT1: Fault Indicator – Illuminates to let the operator know there is a fault condition. The HMI will display fault message.

Front Loader Controls

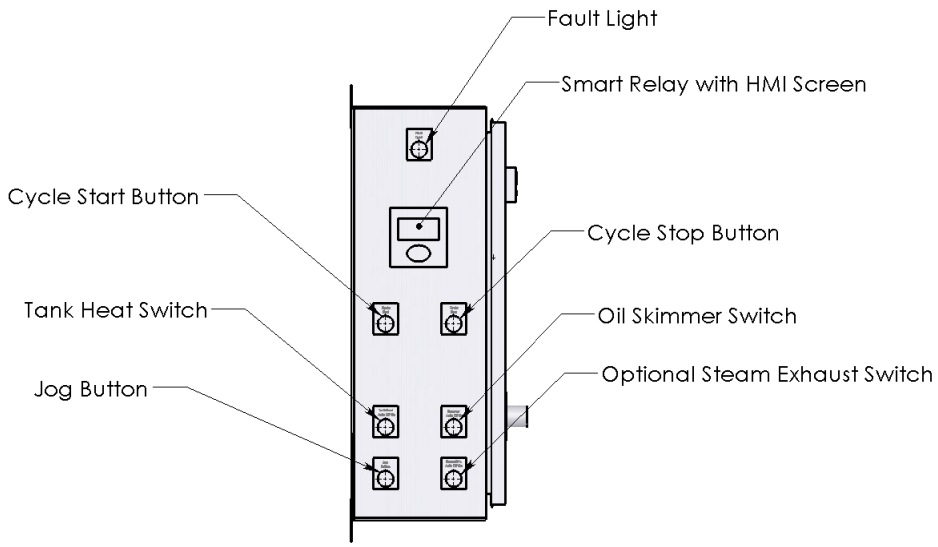

Figure 7: Front view of front loader electrical enclosure

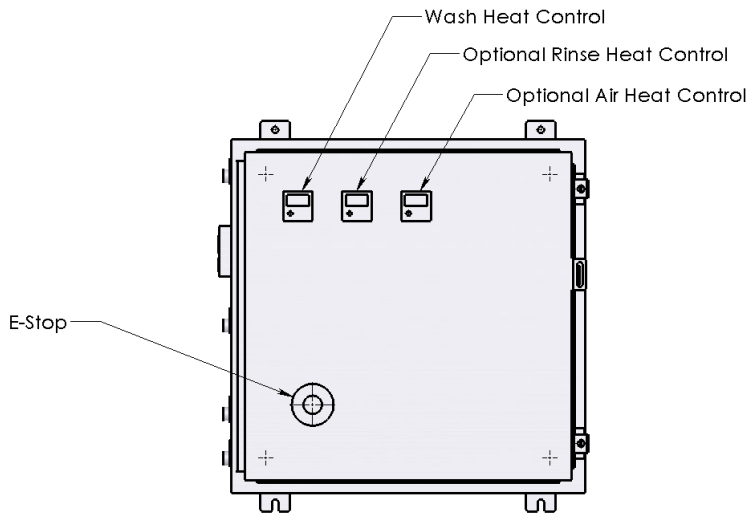

Figure 8: Side view of front loader electrical enclosure

Top Loader Controls

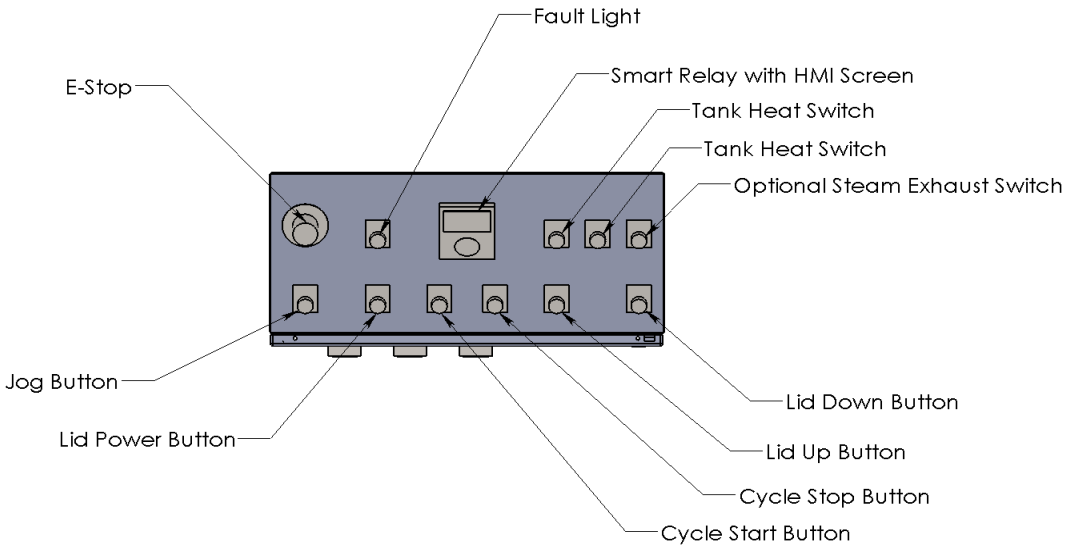

Figure 9: Top view of top loader electrical enclosure

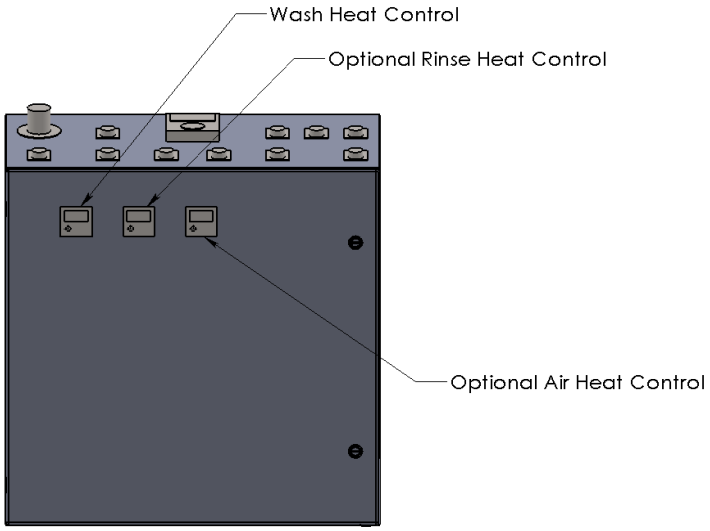

Figure 10: Side view of top loader electrical enclosure

Chapter 6

6

SMART RELAY HMI SCREEN FUNCTIONS

General Operations

The Eaton Smart Relay HMI (human-machine interface) is used to control wash/rinse/dry cycle times as well as heater and oil skimmer run times. The home screen displays the wash time only. Press "ESC" multiple times from any screen to return to the home screen.

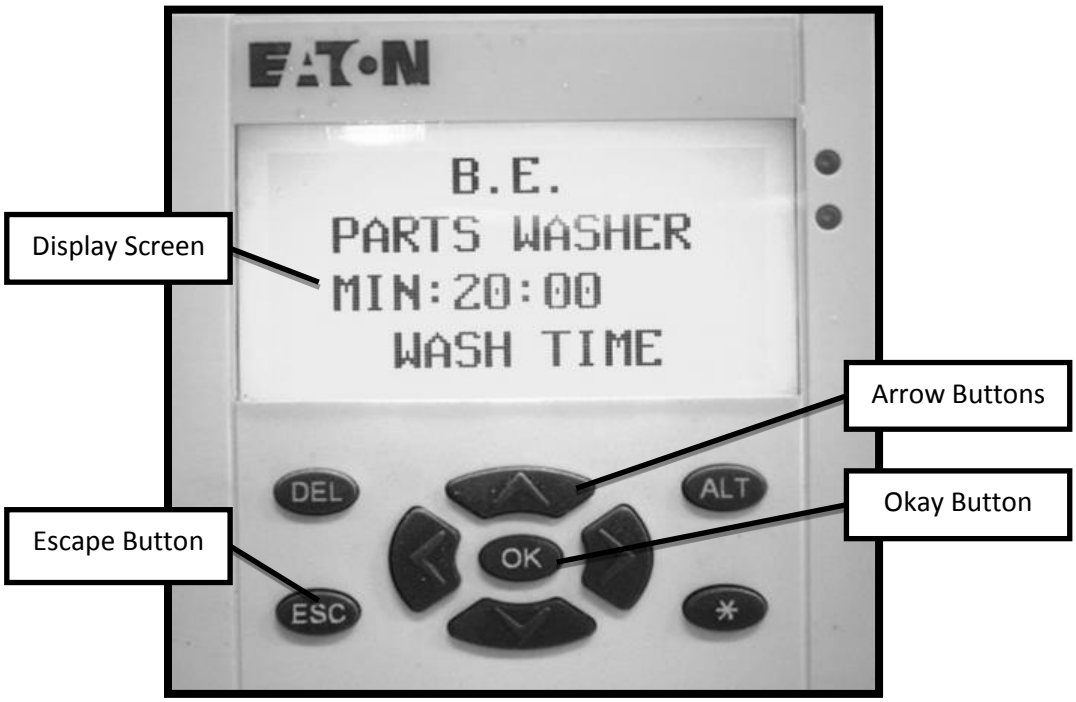

Figure 11: Eaton Smart Relay HMI displaying the home screen

Setting Current Date & Time

In order to use the HMI's built in timers, the internal clock must be set. Beginning at the "home" screen, the following steps allow an operator to set the current date and time:

1. Press "OK" to display an intermediate screen.

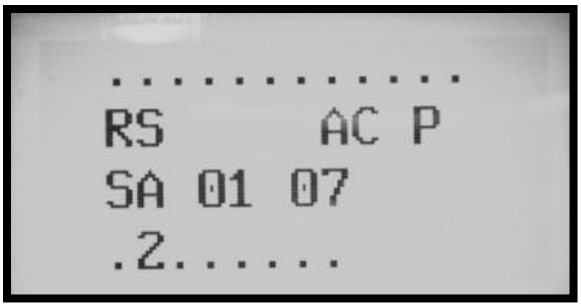

Figure 12: HMI intermediate screen

2. Press "OK" again to display the menu screen. **WARNING:** Do not alter password settings.

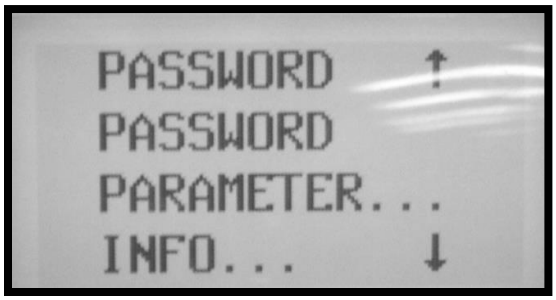

Figure 13: Top of HMI menu screen

3. Press the down arrow to scroll to the "Set Clock" option.

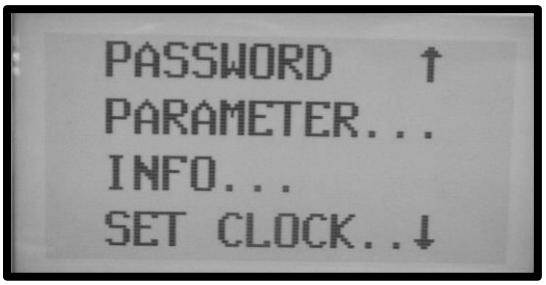

Figure 14: Bottom of HMI menu screen

4. Press "OK" to display the intermediate set clock screen.

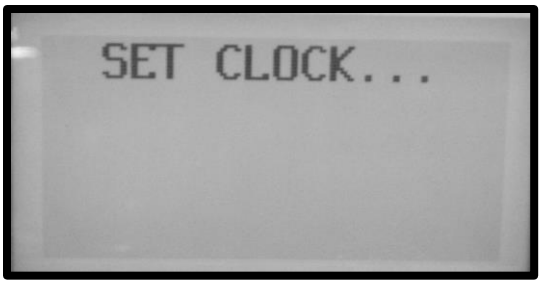

Figure 15: HMI intermediate set clock screen

5. Press “OK” again to enter the clock editing screen. This screen consists of three lines: “HH:MM, DD:MM, and YEAR.

    a. Use the up and down arrows to scroll to the desired line.

    b. Press “OK” to edit the desired line.

    c. Use the left and right arrows to scroll to a particular value, and the up and down arrows to change that value.

    d. Press “OK” when done to save date and time.

Figure 16: HMI set clock screen

Seven Day Timer Function

The seven day timer function is available to two operations on this unit: The tank heaters and the oil skimmer. Each function has multiple programs to tell it to be on or off during different times on different days of the week. Beginning at the "menu" screen, (see previous section for navigating to the menu screen) the following steps allow an operator to set the heater and oil skimmer times:

1. Press the down arrow until "Parameter" is selected. Press "OK" to display the parameter screen.

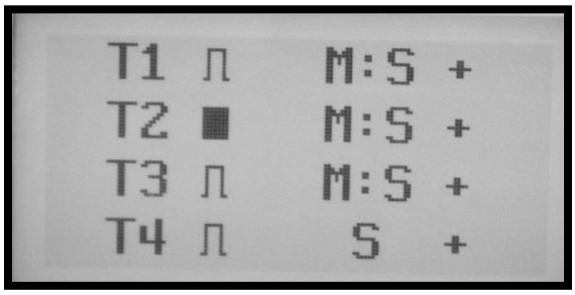

Figure 17: HMI parameters screen

2. Press the down arrow to scroll to the bottom of the parameter screen, where "1" and "2" are displayed. 1 controls the seven day clock for the heaters. 2 controls the seven day clock for the oil skimmer.

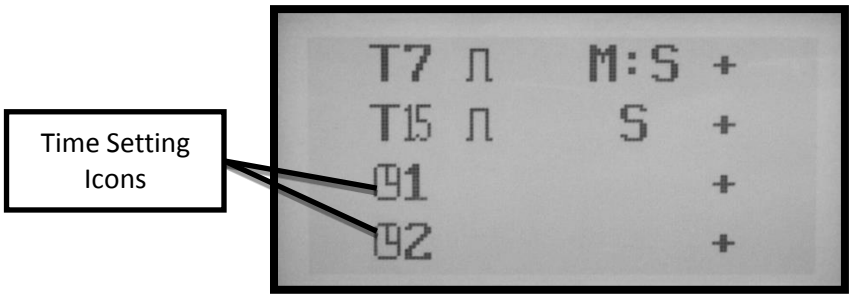

Figure 18: Bottom of HMI parameters screen

3. Press "OK" on 1 or 2 to display the seven day clock screen. This screen displays a program choice, current time, weekdays, "on" time, and "off" time. The screen defaults to highlighting the program choice. Four programs (A, B, C, and D) are available for the user to choose various days and times. Press the up and down arrows to navigate between programs.

    a. To set the day that the chosen times apply to, press the right arrow to select the first weekday choice. Press the right arrow again to select the second weekday choice. Press the up or down arrow on either weekday to scroll through the days of the week. Press "OK" to choose the desired day.

b. To set the “On” time, press the right arrow again to highlight the first digit. Press “OK” such that the digit begins flashing. Press the left and right arrows to choose other digits. Press the up and down arrow to select the desired number. Press “OK” to confirm the selection. Press the down arrow to highlight the first digit of the “Off” time, which can be set in the same way

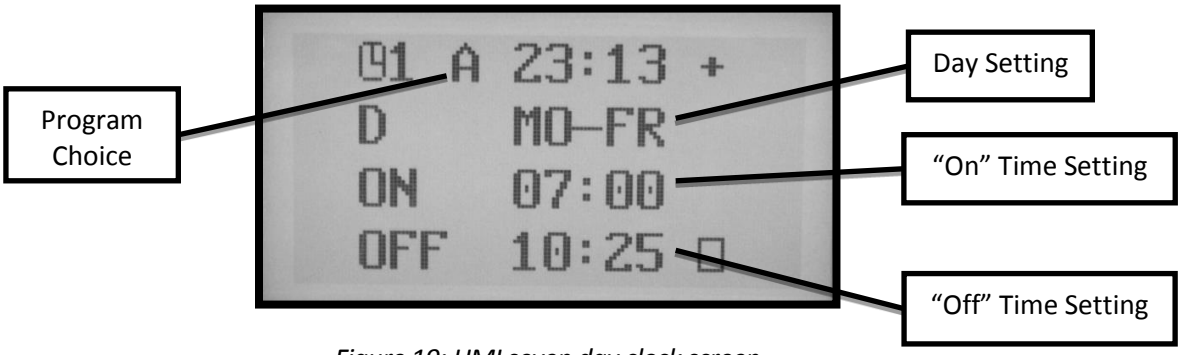

Figure 19: HMI seven day clock screen

Setting Wash Time Only

An operator can change only the wash cycle time directly from the home screen. This can be done by the following steps:

1. Press “ALT” to display the flashing cursor.
2. Press “OK” to change the flashing cursor to a flashing number.
3. Use the left and right arrow buttons to navigate to the desired minute or second to be changed.
4. Use the up and down arrow buttons to change the value.
5. When finished, press “OK” and then “ESC” to exit.

Setting Wash, Rinse, Dry, & Other Times

An operator can change all cycle times through the following steps, beginning at the “menu” screen (see “Setting Current Date & Time” section for navigating to the menu screen):

1. Press the down arrow until “Parameter” is selected. Press “OK” to display the parameter screen. This screen displays timers T1 through T7, and T15. These timers are defined as follows:

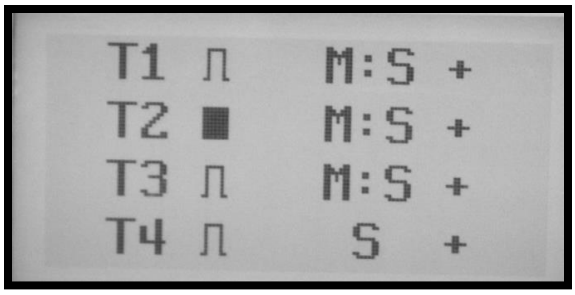

Figure 20: HMI parameters screen

- T1- Wash Stage Timer: Sets the amount of time that the wash pump will operate. This timer can also be modified on the home screen.
- T2- Wash Draining Timer: Holds the diverter towards the wash tanks and delays the start of next stage to allow the displaced wash water to return to the wash holding tank.
- T3- Rinse Stage Timer: Sets the amount of time that the rinse stage will need to operate. (Optional)
- T4- Blowout Timer: Activates the dry cycle at the beginning of the rinse stage to clear the dry plumbing of wash water. (Optional)
- T5- Flush Timer: Delays the rotation of the diverter plumbing from going to the rinse side at the start of the Rinse Stage. (Optional).
- T6- Rinse Drain Timer: Holds the diverter toward the rinse for the set time to allow the displaced rinse water to exit the wash chamber. (Optional)
- T7- Dry Stage Timer: Sets the amount time that the dry system will run. (Optional)
- T15- End of Cycle Delay: Sets a delay before the cycle completion screen appears to provide time for a steam exhaust to evacuate the wash chamber of steam before the operator opens the wash chamber door. (Optional)

4. Use the up and down arrow buttons to navigate to the desired timer. Press OK to display the cycle timer screen. “I1” represents the cycle time. Press “OK” to begin editing the cycle time. Press the left and right arrow keys until the desired digit is flashing. Press the up and down arrow keys to select the desired value. Press “OK” when done to save cycle time. Press “ESC” to return to parameters screen.

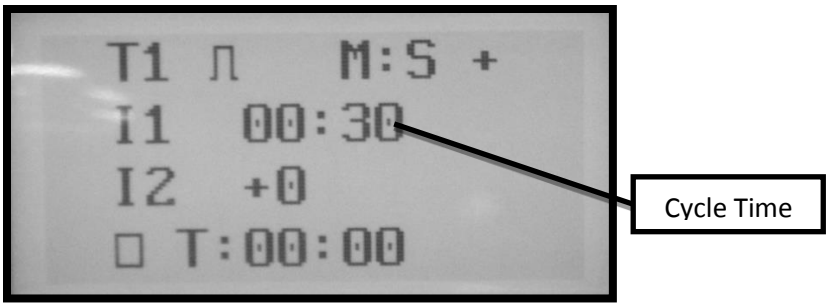

Figure 21: HMI Cycle timer screen

Running a Cycle

After all timers have been set, a cycle is ready to be run. Press the "Cycle Start" pushbutton to begin the cycle. The following screens will automatically be displayed to display the current status of the machine to the operator. Each screen displays the current stage, the set time value, and the remaining time counter. Note that rinse and dry stages are optional.

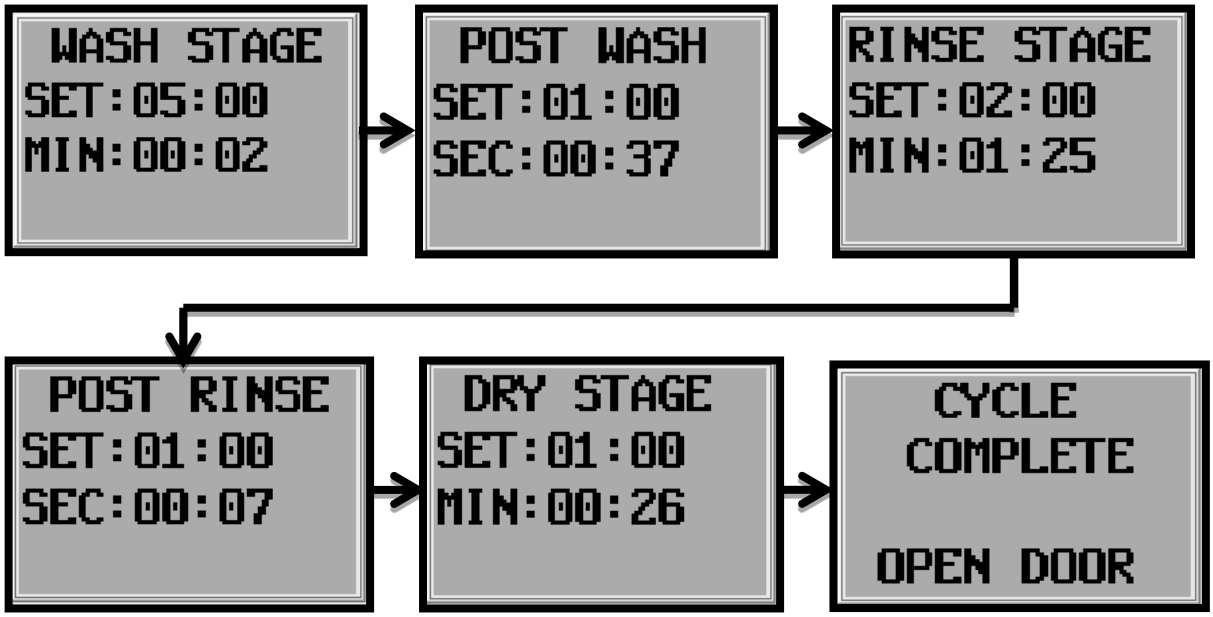

Figure 22: HMI sequential stage displays

Fault, Warning, and Other Screens

Additional screens display automatically given certain conditions:

Table 1: Various HMI screens and their corresponding conditions

Display Screen	Condition
EMERGENCY STOP BUTTON PRESSED	The Emergency Stop pushbutton is depressed. Turn the button clockwise to allow it to pop out and reset.
FAULT WASH/RINSE TANK EXTRA LOW	The wash or rinse tank water is too low for the machine to safely run. Refill the tanks.
AIR HEAT OVER TEMPERATURE FAULT	The air heater element is too hot. To remove the screen, the over temperature control unit inside the electrical enclosure must be reset.
CALENDER DATE06.12.12 HRS 08:42MIN	The calendar screen can be displayed by pressing the right arrow button. It shows the current date and time. The only way to reset the calendar is by connecting to the smart relay with your laptop. This screen will be displayed for 45 seconds.
CYCLE INHIBITED DOOR OPEN	The door open screen will be displayed if a cycle is started while the cabinet door is open, or if the door is opened while a cycle is in progress.

Chapter 7

7

ROUTINE MAINTENANCE

Daily

1. Check the water level in each tank.
2. Clean any spray nozzles that are clogged.
3. Clean out the removable chip basket.
4. Clean out the optional strainer basket in each filter housing.
5. Check the pressure drop across the optional bag filters. If the pressure drop is more than 10 psi from the inlet to the outlet pressure, replace the filter bag.
6. If any solution spills onto the painted surfaces, wipe it off with fresh water.
7. Adjust the detergent concentration as needed.
8. Run the oil skimmer to prolong the life of the machine.
9. Leave door cracked after use to prolong machine life.

Weekly

1. Remove any sludge trapped in the 2” deep trough at the rear of the washer.
2. F-4000 and larger units: Check the grease cup warning LED lights to ensure it is working properly. See the grease cup manual for information on the LED warning messages.
3. Check oil skimmer container and empty if full.
4. Clean tank and remove sludge.

   Tank Cleanout/Sludge Removal

   Given the many different types and sizes of businesses that use Better Engineering's jet washers, it is not possible to recommend a time schedule for cleaning out your tank. For some

businesses, the tank needs to be cleaned at least once a week while others can go six (6) months before they need to clean out the tank.

The cleanout schedule will be based on the size tank your model has, on your cleaning volume, and on the amount of contamination on your parts. To prolong the clean out schedule in rebuilding-type applications, it often makes sense to scrape off caked on grease, dirt, etc., before putting the parts in the jet washer.

The tank should be cleaned out after the tank has accumulated more than 1" of sludge at the rear of the tank. Clean the tank after the first week of operation to determine what your clean out schedule should be.

To remove the sludge, follow these steps:

1. Disconnect power to the machine or make sure the pump and heat circuits are off.
2. Pump the water (air operated diaphragm pump recommended) into one or more drums. This water can normally be re-used many times before disposal is required.
3. Access the rear of the tanks is through one of the removable cover plates.
4. Optional marine access doors on the tank provide improved access for cleaning.
5. Scrape the sludge out of the tank and handle it according to governing regulations.
6. Pump the water content back into the tank or allow the tank to fill with fresh water.
7. If you have a problem with clogged nozzles, you may need to flush out the spray pipes. Remove any pipe caps and the bottom spray nozzles. Run a brief 30 to 60 second wash cycle to flush out the sediment (**CAUTION:** Running a longer wash cycle could damage the pump motor).
8. Check all external hoses for leaks or weaknesses and replace if necessary. Check these hoses during a wash or rinse cycle to see if a bubble forms in the hose lining.

Monthly

1. Adjust the detergent concentration (customer should check concentration levels periodically and develop a routine for adding chemical).
2. Check all external hoses for leaks or weaknesses and replace if necessary. Check these hoses during a wash or rinse cycle to see if a bubble forms in the hose lining.
3. Check that the door safety switch is depressed by the plunger. Carefully open door, just enough to release door safety switch, during a wash cycle and observe that pump shuts off.

4. F-3000 series- grease the bearing base Zerk fitting until the grease seeps out around the assembly.

5. Tighten wires in the control box.

Quarterly

1. Check the door gasket for wear and replace if necessary.

2. PCS units only- check the drain plunger pads for wear.

3. Refill the grease cup if necessary.

4. Top Loading Models- Check the linear actuator that powers the lid up and down. Look for stress cracks on the chrome plated tube of the linear actuator. Also look for stress cracks at and around the connection points of the linear actuator. With someone standing behind the unit, power the lid up and down checking for any irregularities. Check the side mounted gas shocks which serve two (2) purposes:

    1) Assist the linear actuator.

    2) In the event the linear actuator fails, the shocks should allow the lid to gently fall.

Yearly

1. Perform a full preventative maintenance service to the unit.

BEARING BASE COMPONENTS

All Purifier jet washers feature a turntable which rotates on a bearing base. The F-3000 features a 750lb. bearing base. The F-4000 Features a 1” (1,500lb.) bearing base. All larger purifiers feature a 2” (2,500lb.) bearing base. The following figures depict internal components for each bearing base size.

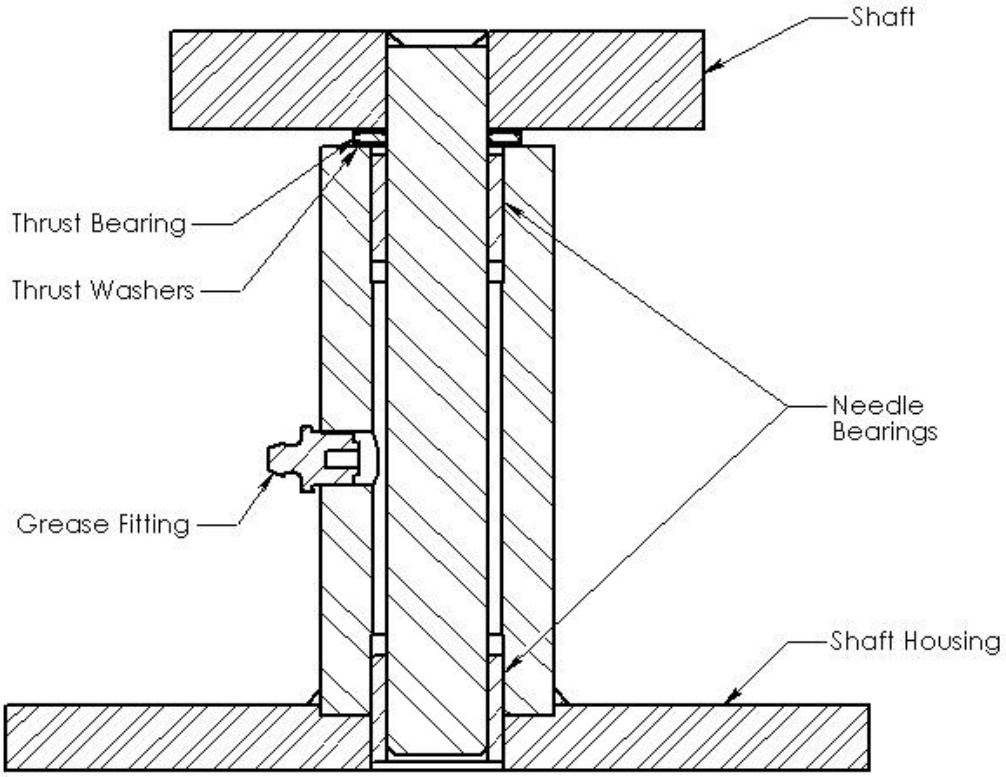

Figure 23: Section view of 750lb. bearing base

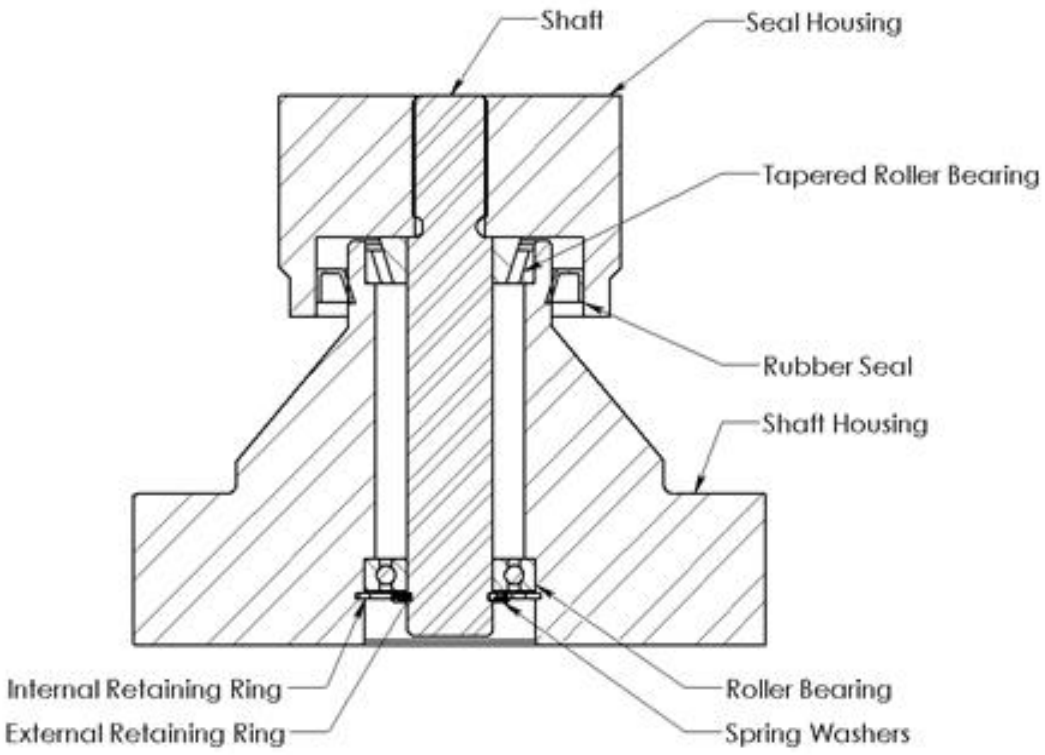

Figure 24: Section view of 1" bearing base

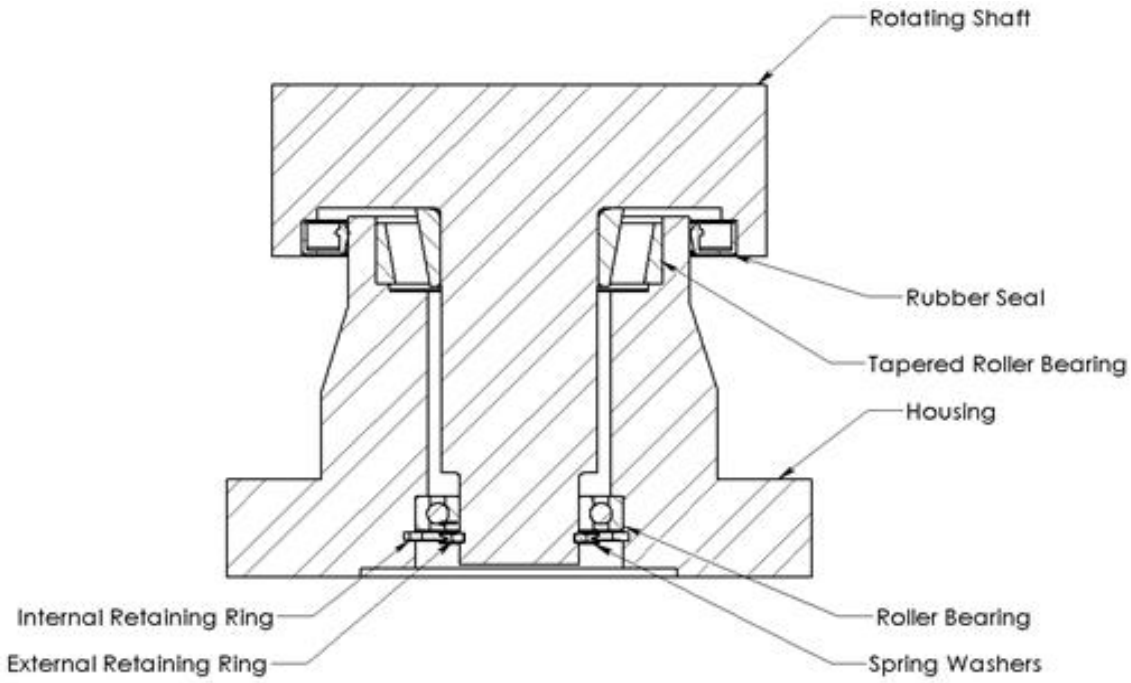

Figure 25: Section view of 2" bearing base

AUTOMATIC LUBRICATION

Initial Lubricator Startup

All F-4000 and larger Purifier machines feature a Perma Star Vario automatic bearing base lubrication system. This system consists of a protection cap, drive system, battery pack, grease cup, and support flange. Once programmed, the drive system will slowly force grease out of the cup, through the support flange, and into the bearing base.

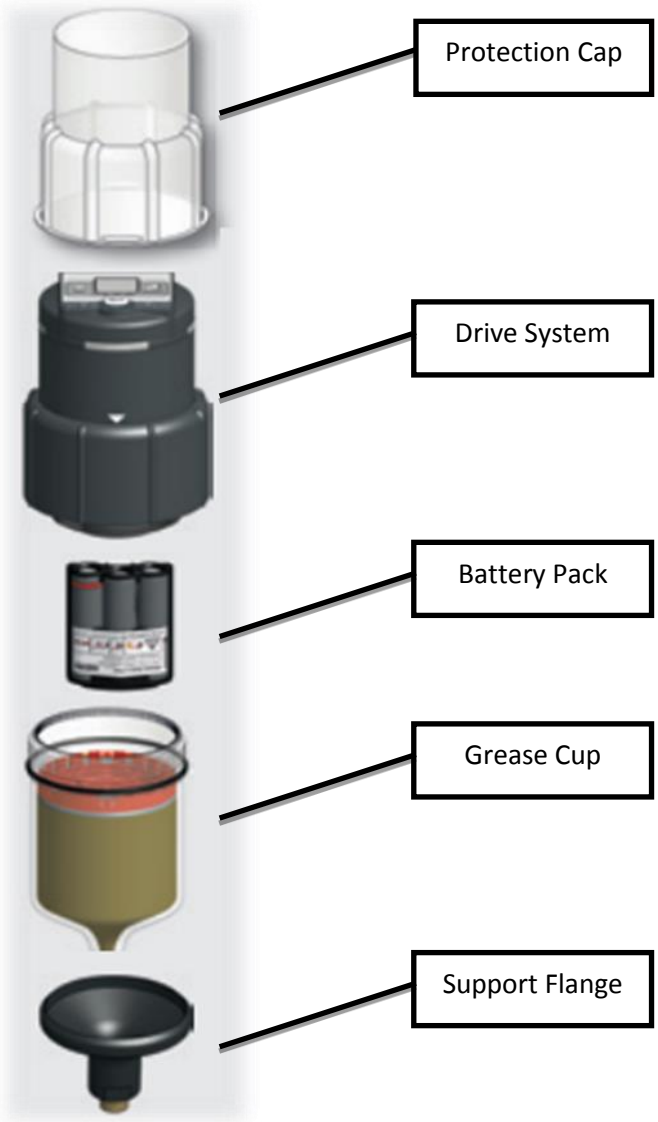

Figure 26: Perma Star Vario automatic lubrication system

The following steps instruct a user on initial setup of the lubricator.

1. Remove clear plastic protection cap.
2. Unscrew drive system from grease cup.
3. Insert battery pack (shipped inside main electrical enclosure) into drive system.
4. Screw drive system back into grease cup until white arrows are fully visible.
5. Hold down “Set” button on drive system until the bottom three bars on the screen begin flashing.
6. Press “Set” until one bar appears over the “250” space. This number refers to the size of the grease cup. All purifiers come with the L250 grease cup.
7. After a few seconds, a flashing “0” will appear. Press “Set” until the screen displays the desired amount of months that the grease cup will last (1 through 12).
    a. This setting depends on the frequency of use and type of parts being washed.

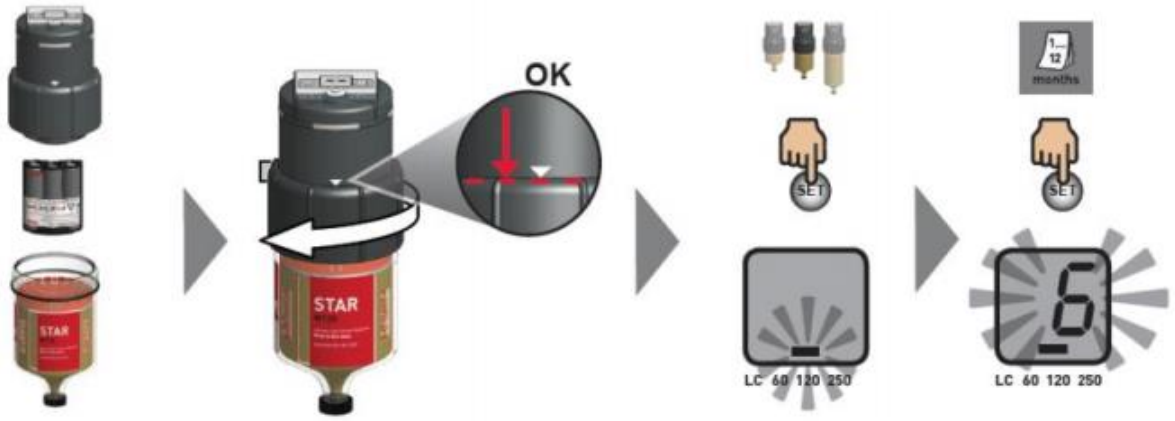

Figure 27: Automatic lubrication system initial setup flow chart

Replacing the Grease Cup

When the grease cup is empty, unscrew it from the support flange and drive system. Screw a replacement grease cup into the support flange and re-install the drive system. Follow the startup instructions to begin pumping grease out of the new cup.

Chapter 8

8

TROUBLESHOOTING

Caution: A licensed electrician should perform all electrical checks and power to washer should be turned off as necessary.

Note: If any of the following suggestions do not solve the problem, consult the dealer or factory.

Table 2: Troubleshooting symptoms and remedies

Symptom	Issue/Remedy
Nothing works - heat or pump	• Breaker is off/no power to machine • Check transformer breakers inside enclosure • If breaker keeps tripping consult your dealer
Solution won't get hot	• Check heater breakers • Heat contactors pull in, and there is voltage to heaters. One or more heating elements are bad • Heat contactor pulls in, but no voltage to heaters. Bad contactor or bad wire connections • Heat contactor does not pull in but there is voltage going to coil of contactor (A1 and A2). Replace heat contactor • Heat contactor does not pull in and there is no voltage to coil of heat contactor. Check seven day clock settings
Turntable not rotating	• Gear motor that drives chain is not running. Check voltage to motor- If correct, replace motor • Gear motor is running but turntable is not rotating. Check chain tension. • If chain is running, turntable is frozen, jammed, or tilted
Pump motor comes on but won’t pump or pumps very little	• Water level is too low • Pump is rotating backwards (see arrow on motor) • Pump is broken • Solution is foaming • Spray manifolds or filters clogged with dirt • Solution temperature is too high/boiling • Something caught in pump

Pump motor won't start, but turntable motor is working	• If motor is 3 phase, check overload on contactor and reset if necessary • If overload stops motor again, call factory • Defective motor starter • Pump motor has internal problems. Call factory
Nozzles clogging frequently	• Filter basket, tank, and/or spray manifolds need to be cleaned more often • May need to use larger but fewer nozzles
Wash solution foaming	• Wrong detergent. Not designed for a jet washer • Started wash cycle when solution was cold • Concentration is too low. Add more detergent • Water level is too low • Add de-foamer
Poor Cleaning	• Wrong detergent, low detergent concentration, or hard water • Clogged nozzles • Solution is too dirty • Turntable is not rotating • Solution is not hot • Low output from pump • Nozzle pattern needs adjustment/consult factory
Oil skimmer not working	• Check settings in seven day clock function • Wiper blades too tight against disc • 7 day timer is defective • Small motor on the skimmer is defective
Bag filter clogging too frequently	• Clean the tank more often • If permissible, use coarser bags
Low water shut-off and/or fill malfunctioning	• Float ball is stuck or Internal switch of float mechanism is bad • Fill solenoid is stuck, clogged, or defective
Wash or Rinse tank overflowing	• Auto-fill solenoid stuck open • Float ball is stuck or Internal switch of float mechanism is bad • Check for loose or damaged wiring at the water level/temperature sensor assembly • Pneumatic diverter plungers are not working properly or are leaking
Wash or rinse tank volume decreasing	• Auto-fill solenoid won't open • Delay time between wash and rinse not long enough to return all wash water to tank • Pneumatic diverter plungers are not working properly or are leaking

To order parts or for technical assistance please call our Customer Service Department at **800-229-3380** or visit our website: **www.betterengineering.com**