ITEM	DESCRIPTION	REQ'D.

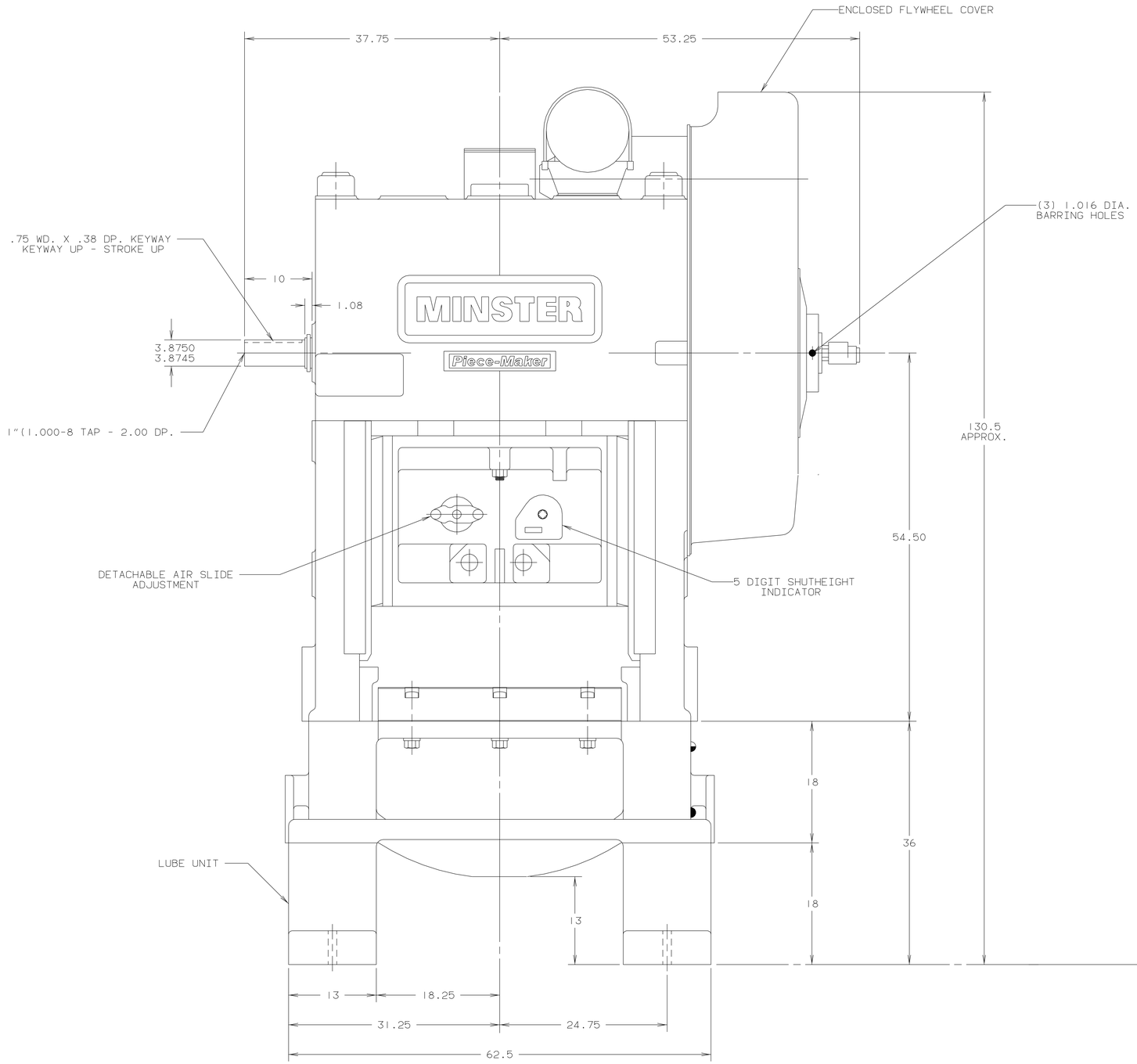

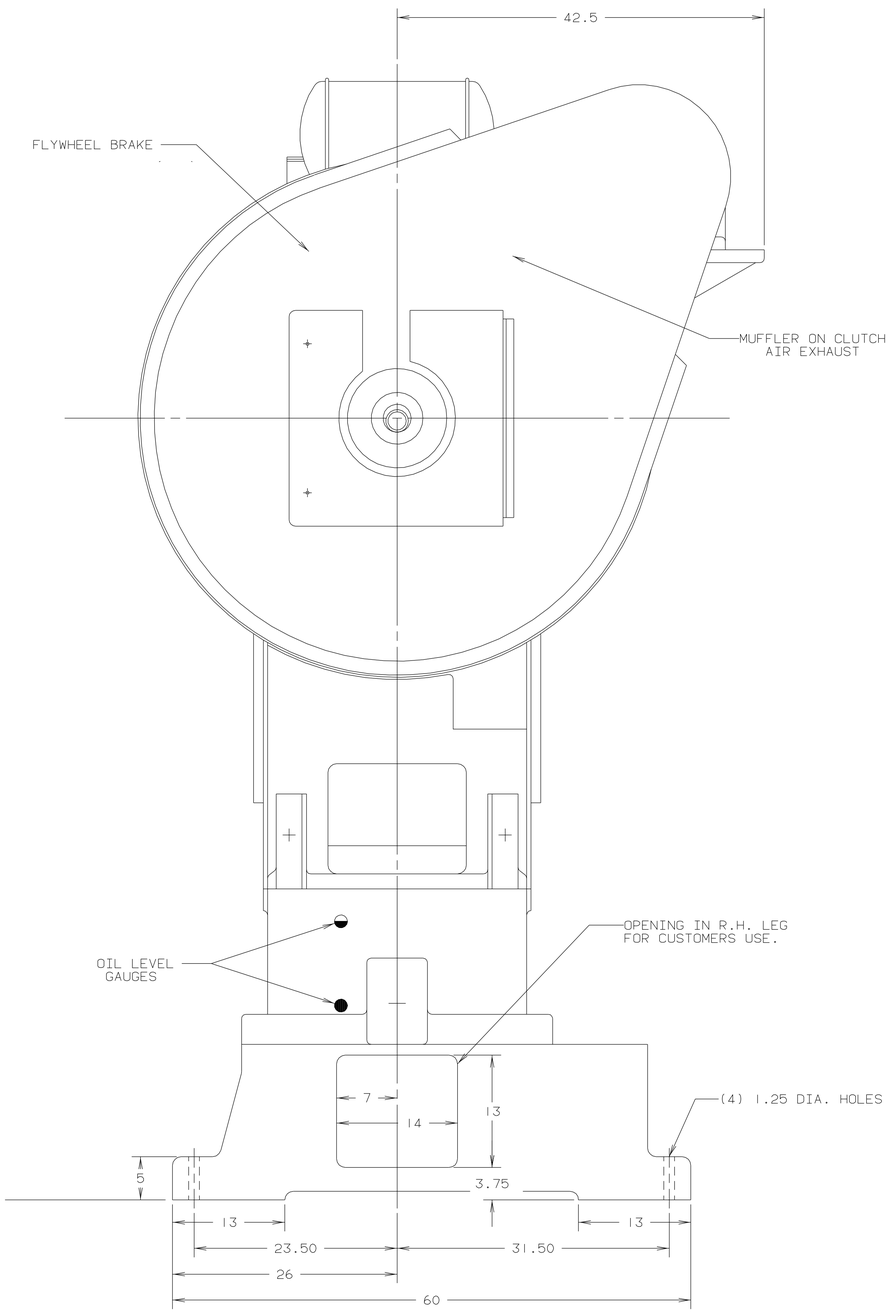

EST WEIGHT	RAW MATERIAL WEIGHT
GROUP TECH NO	P2-100-36-2000-006
REFERENCE NO	
SUPERSEDED BY	
SUPERSEDES	
PATTERN FILE NO	
PATTERN BASIC NO	

MACHINED SURFACES UNLESS OTHERWISE SPECIFIED

DIMENSION	TOLERANCE ±
X AND X X	0.100
X XX	0.010
X XXX	0.001
X XXXX	0.0005

FINISH 125 MICROINCHES
BREAK SHARP CORNERS 0.03
⊥ 0/5 ∠ 0/5 // 0/5

THE MINSTER MACHINE CO.

MINSTER, OHIO

LAST REV DATE: –
REV LEVEL:
CHANGED BY: –

©1988 THE MINSTER MACHINE COMPANY THIS DOCUMENT IS THE EXCLUSIVE PROPERTY OF THE MINSTER MACHINE COMPANY. ANY DISCLOSURE, DISTRIBUTION AND/OR REPRODUCTION WITHOUT THE EXPRESS WRITTEN CONSENT OF THE MINSTER MACHINE COMPANY IS PROHIBITED. ALL RIGHTS RESERVED.

DATE	DRAWN BY	CHECKED BY	SCALE
11-17-88	JAF	RK	.12

NAME OF PART: LAYOUT, GENERAL ASSEMBLY

MATERIAL:
PATT NO:
NO REQ'D: D
PART NO: 1160-065