ITEM	DESCRIPTION	REQ'D.

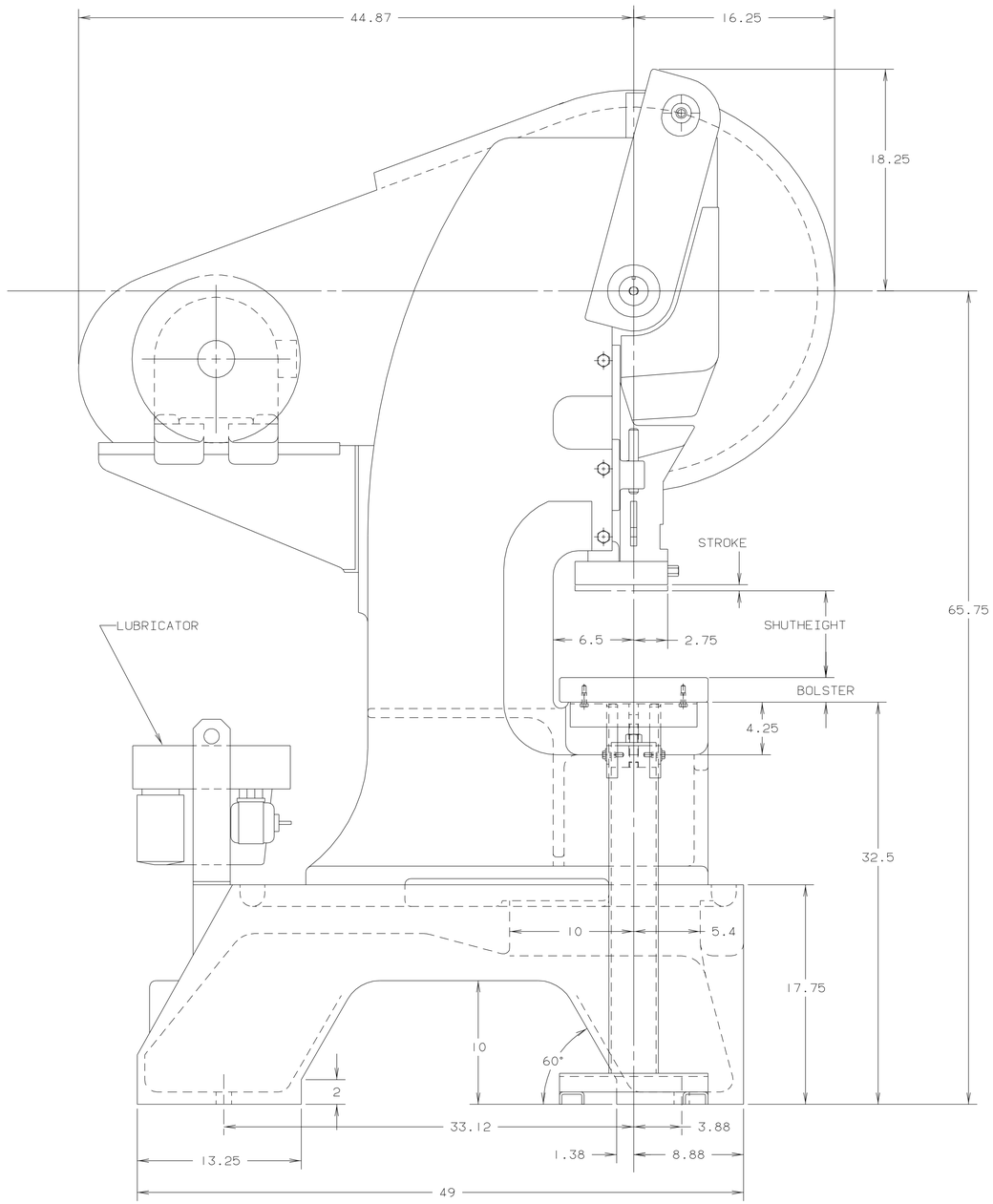

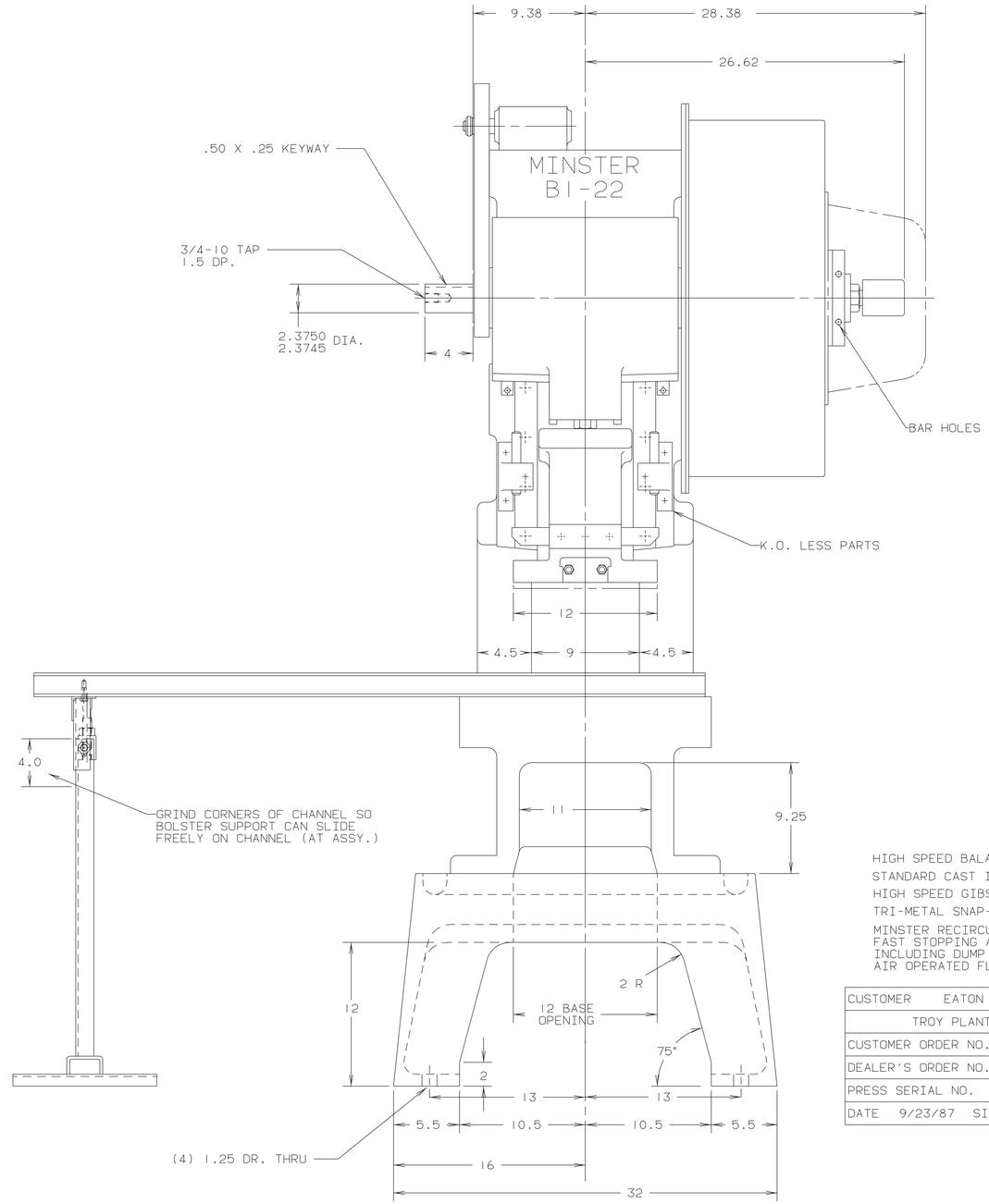

HIGH SPEED BALANCED CRANKSHAFT
STANDARD CAST IRON FLANGED SLIDE
HIGH SPEED GIBS
TRI-METAL SNAP-IN BEARINGS
MINSTER RECIRCULATING LUBE SYSTEM
FAST STOPPING ARRANGEMENT IN CLUTCH
INCLUDING DUMP VALVES
AIR OPERATED FLYWHEEL BRAKE

CUSTOMER	EATON CORP.
	TROY PLANT WHIPPANY N.J.
CUSTOMER ORDER NO.	076-9798
DEALER'S ORDER NO.	PRESSMASTERS
PRESS SERIAL NO.	BI-22-26661-2
DATE 9/23/87	SIGNED K.J.M.

EST WEIGHT	RAW MATERIAL WEIGHT	MACHINED SURFACES UNLESS OTHERWISE SPECIFIED	THE MINSTER MACHINE CO.	LAST REV DATE 11-4-87
GROUP TECH NO BI-22-2000-004		DIMENSION / TOLERANCE ±	MINSTER, OHIO	REV LEVEL / CHANGED BY G.B.
REFERENCE NO		X AND X X: 0.100; X XX: 0.010; X XXX: 0.001; X XXXX: 0.0005	©1987 THE MINSTER MACHINE COMPANY. THIS DOCUMENT IS THE EXCLUSIVE PROPERTY OF THE MINSTER MACHINE COMPANY. ANY DISCLOSURE, DISTRIBUTION AND/OR REPRODUCTION WITHOUT THE EXPRESS WRITTEN CONSENT OF THE MINSTER MACHINE COMPANY IS PROHIBITED. ALL RIGHTS RESERVED.	
SUPERSEDED BY		FINISH 125 MICROINCHES; BREAK SHARP CORNERS 0.03	DATE 9-25-87 / DRAWN BY G.B. / CHECKED BY KJM	SCALE .19
SUPERSEDES		⊥ .015 ∠ .015 // .015	NAME OF PART GENERAL ASSEMBLY	
PATTERN FILE NO			BI-22	
			MATERIAL	PATT. NO
PATTERN BASIC NO			NO REQ'D D	PART NO 1147-928