This document is the absolute property of Konecranes,Inc.. This document must not be copied without the written permission of Konecranes,Inc. or it's parent company Konecranes Corporation. The contents thereof must not be disclosed to a third party nor be used for any unauthorized purpose. Contravention will be prosecuted.

Included in					
Rev	Explanation	Date	Revised by	Checked by	

US62021515-AS

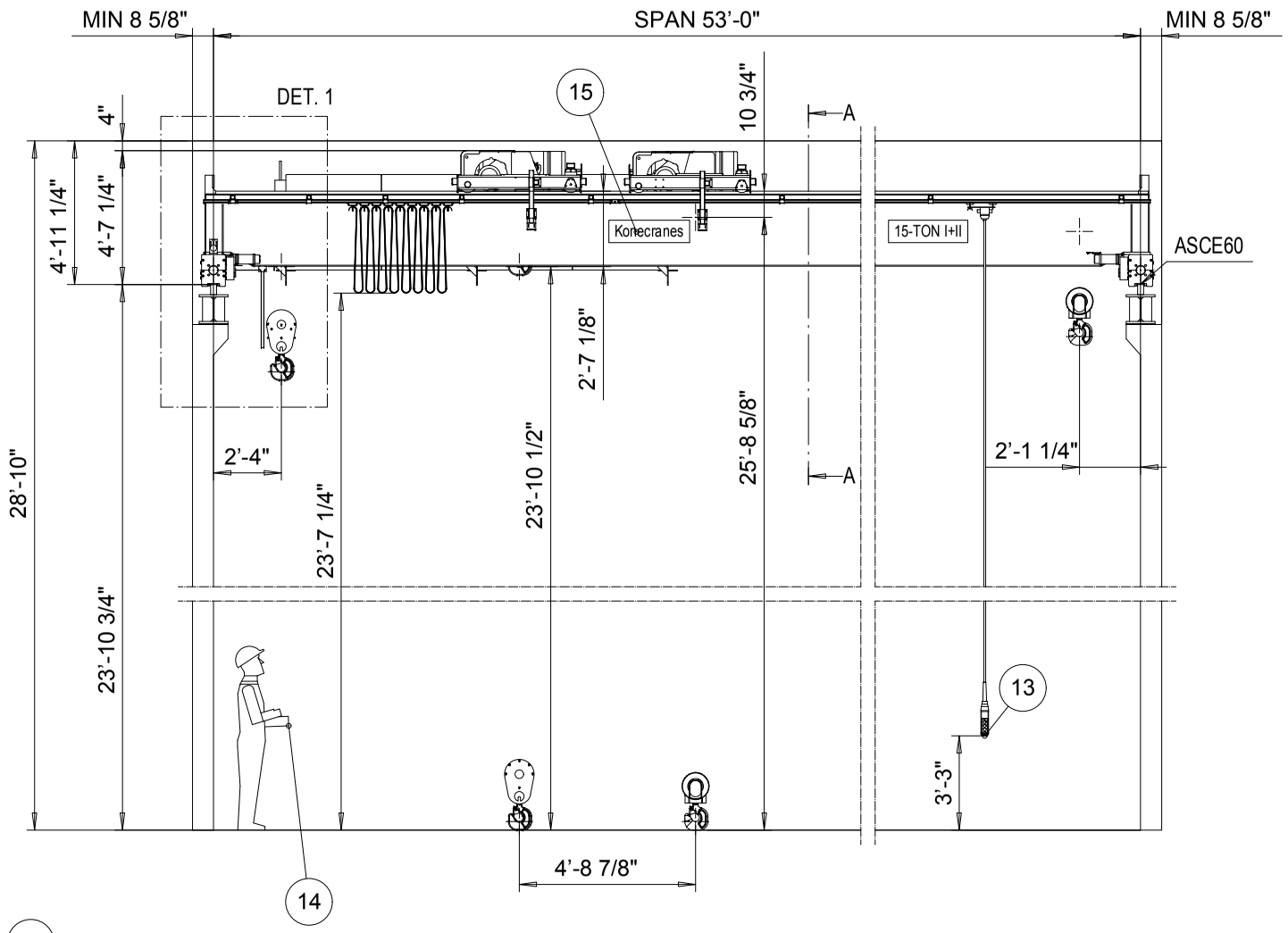

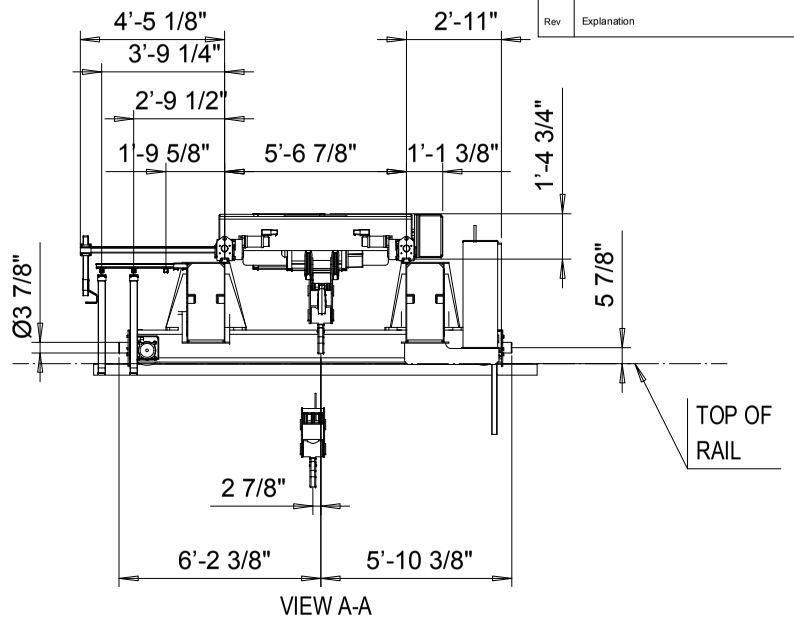

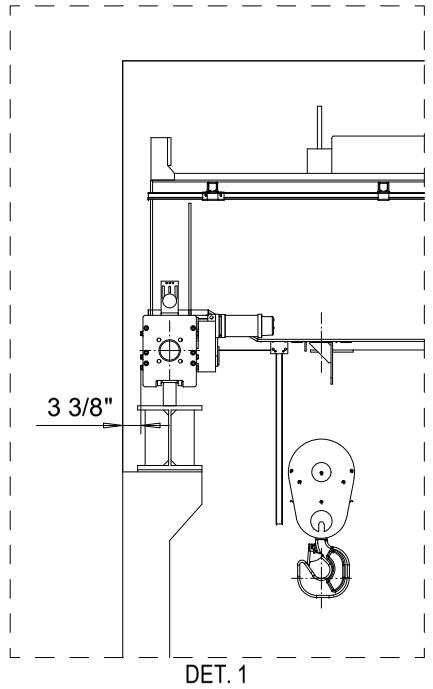

CERTIFIED FOR CONSTRUCTION

05/20/2015

150179406

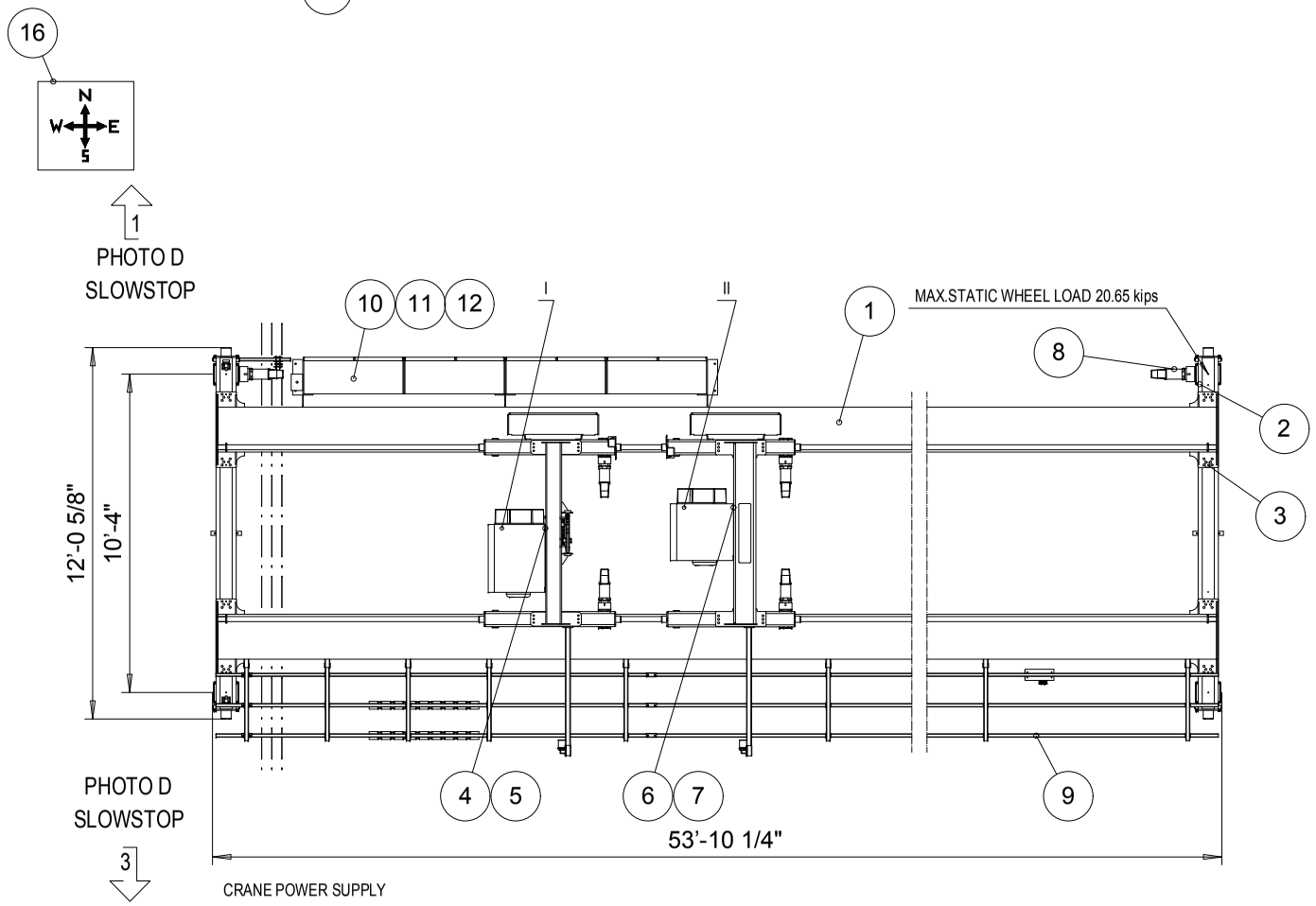

TECHNICAL DATA

SPAN	: 53'-0"
CRANE CAPACITY (HOIST USE)	: 15-TON I+II
LIFTING HEIGHT	: 25'-0"
TRAVELLING SPEED	: 100 ft/min stepless
WEIGHT OF CRANE	: 20501 lbs
WEIGHT OF BRIDGE	: 17310 lbs
MAIN VOLTAGE	: 460 V PE; 60 Hz
CONTROL VOLTAGE	: 115 V; 60 Hz
CRANE GROUP	: CMAA - 'C'
CRANE DRIVE GROUP	: FEM M5
SUPPLY POWER	: 43.98 Hp
LENGTH OF RUNWAY	: 45.72m

SURFACE TREATMENT OF CRANE

BRIDGE COLOR	: RAL1028
PAINT	: W/127 µm

Crane is without service platform.
Service must be done from a separate platform for lifting persons

Indoor Use crane
Radio controlled crane
Pendant as backup

HOIST DATA

	I: CXT5061	II: CXT5041
LOAD	: 15 TON	: 7,5 TON
LIFTING HEIGHT (MAX)	: 26'-2 7/8"	: 29'-6 1/4"
HOISTING SPEED	: 20 ft/min stepless (With ESR 25 ft/min)	: 20.0 ft/min stepless (With ESR ESR ft/min)
TRAVERSING SPEED	: 65 ft/min stepless	: 65 ft/min stepless
WEIGHT OF TROLLEY	: 1840 lbs	: 1530 lbs
HOIST GROUP	: FEM M5	: FEM M6

Pos	Amount	Description	Specification
16	1	DIRECTIONS LABEL	COMPASS_1
15	2	SUPPLIER LABEL	
14	1	REMOTE CONTROL	REMOX516MI0S0TCRTCU00ST
13	1	PENDANT	PENDAX12-2222NCV3-072P0
12	1	LIFT CONTROL	DynAHoist
11	1	CRANE DRIVE CONTROL	TDN-007E
10	1	ELECTRICS PANEL	CRANEL---2-MAV3-76JE
9	1	HOIST SUPPLY	QQSMD2XM80--76162E
8	2	CRANE DRIVE	GES490PS2BOF06LA20P-6460E
7	1	HOIST II DRIVE CONTROL	TDN-007E
6	1	HOIST II	CXT50410080S56FDD0S
5	1	HOIST I DRIVE CONTROL	TDN-007E
4	1	HOIST I	CXT50610150S75HED0S
3	2	JOINT	B-TOP-H_-MED-S
2	2	END CARRIAGE	ECN25-3279-H51349C0000-N
1	2	MAIN GIRDER	US62021315-B

Shrikant Karajgi Design	Prashant Chd	Manoj Varu Appd	Ref drawing	US62021315 Vx proj
05/18/2015 Date	CXTD15-TON I+II x 53ft Hol:25.01ft			1:50 / 1:25
IEN Dept	GE oil and Gas.			M-film
KONECRANES Konecranes,Inc.	US62021515-AS			Issue 1

Twin copy