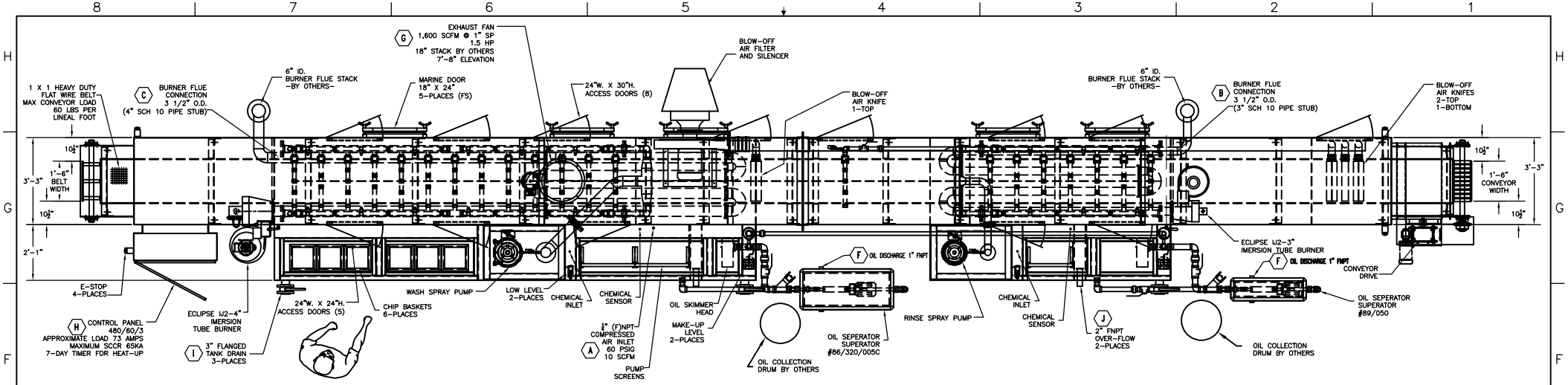

PLAN VIEW

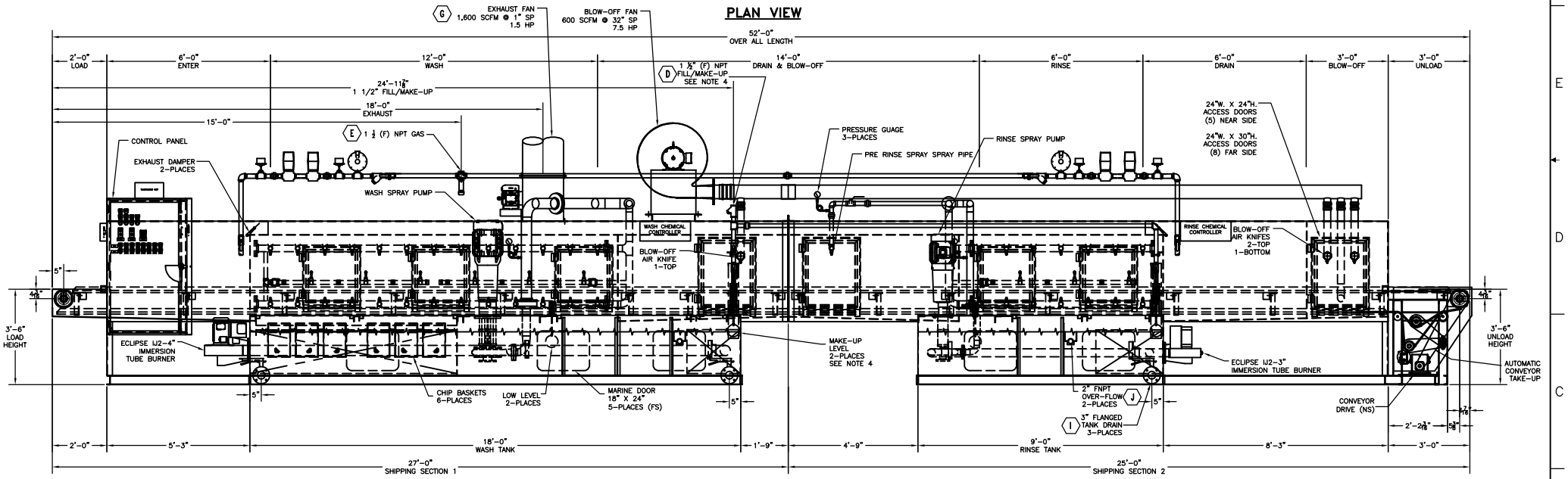

NOTES:

1. MATERIAL SPECIFICATIONS:
   TANK AND HOUSING – STAINLESS STEEL
   CHIP BASKETS – STAINLESS STEEL
   IMMERSION TUBE – STAINLESS STEEL
   WASHER EXTERIOR STRUCTURE – PAINTED CARBON STEEL
   PUMPS – CAST IRON
   INTERIOR PUMP PIPING – STAINLESS STEEL
   EXTERIOR PUMP PIPING – BLACK IRON
   SPRAY PIPES & NOZZLES – STAINLESS STEEL
   SPRAY PIPE QUICK DISCONNECTS – POLYPROPYLENE
   DRAIN VALVES – STAINLESS DISK, IRON BODY
   CONVEYOR – STAINLESS STEEL
   CONVEROR TRACK – STAINLESS STEEL
   CONVEYOR SPROCKETS, SHAFTS, ROLLERS & BEARINGS – CARBON STEEL
   EXHAUST FAN – CARBON STEEL
   BLOW-OFF FAN – CARBON STEEL
   INTERIOR BLOW-OFF DUCT & AIR KNIVES – STAINLESS STEEL
   GASKETS AND SEALS – BUNA-N
2. STAINLESS STEEL LEFT UNPAINTED, PAINT CARBON STEEL STRUCTURAL ONLY: PPG AQUAPON, FEDERAL SAFETY BLUE.
3. PUMPS, MOTORS, FANS & BURNERS WILL HAVE FACTORY PAINT ONLY

UTILITY CONNECTIONS

- (A) COMPRESSED AIR 60 PSI, 1/4" FNPT – 1 PTS
- (B) GAS BURNER FLUE 3 1/2" CONNECTION, 6" FLUE REQUIRED– 1 PTS
- (C) GAS BURNER FLUE 4 1/2" CONNECTION, 6" FLUE REQUIRED– 1 PTS
- (D) CITY WATER SUPPLY 1 1/2" FNPT – 1 PTS
- (E) NATURAL GAS 1270 SCFH @ 2 PSI FM INSURANCE, 1 1/2" FNPT – 1 PTS
- (F) OIL DISCHARGE 1" FNPT– 2 PTS
- (G) EXHAUST STACK 18" DIA. (NET) – 1 PTS
- (H) MAIN PANEL POWER 480V/3PH/60HZ – 100 AMP SERVICE – 73 FLA
- (I) DRAIN CONNECTION 3 FLANGED – 3 PTS
- (J) OVER-FLOW CONNECTION 2 FNPT – 2 PTS

DIRECTION OF TRAVEL ➡

SIDE ELEVATION

OIL SEPARATORS NOT SHOWN

DATA IN TABLE IS BASED ON A 20,000 LBS PER SHIFT @ 6.0 FPM DESIGN SPEED (2–8 FPM VARIABLE SPEED A/C DRIVE)

STAGE	DESIGN TEMP MAX.	TIME CYCLE SEC.	TANK CAP. GAL.	GAS HEAT BTU/HR	NOZZLES / FLOW				PUMP		MOTOR	
					NO.	TYPE:	PSI	GPM EACH	GPM.	HEAD	HP.	RPM.
WASH	150' F	120	1000	830,000	90	H1/4USS6540	40	4.0	360	98	20	1750
PRE RINSE	150' F	5	---	-----	3	H1/4USS6510	30	.87	--	--	--	--
RINSE	150' F	60	500	440,000	48	H1/4USS6540	30	3.5	170	75	7.5	1750

STAGE	DESIGN TEMP MAX.	TIME CYCLE SEC.	GAS HEAT BTU/HR	FAN		MOTOR	
				CFM	WC	HP.	RPM.
BLOW OFF	AMBIENT	30	-----	600	32	7.5	3500

#	DESCRIPTION	DATE	APPROVED
3		6/17/10	MEL
	AS BUILT		
2	REMOVED NOTE #4 ABOUT WASH MAKE-UP	3/24/10	MEL
1	MOVED EXHAUST FAN TO CLEAR BUILDING TRUSS	3/10/10	MEL

CONTINENTAL EQUIPMENT CORP.
MILWAUKEE, WI USA

WASHER GENERAL ASSEMBLY
Wisconsin Nipple & Fitting Corp.

FILE NAME: FB0865-001.DWG
DRAWN 2/16/10 LIEDEL
CHECK
APPR 3/4/10 BC
SIGNED
FILE CODE: PWCDWG
DWG NO: FB0865-001
REV: 3
SCALE 1:16
SIZE E
SHEET 1 OF 2