"ABC" PART NO.				
E2	250	60	44	G20
REFERENCE NO.				
V-1026-485				

UNLESS OTHERWISE SPECIFIED - BREAK ALL SHARP CORNERS 1/32" - ALL FINISH DIMENSIONS ± .010

ITEM	DESCRIPTION	REQ'D
1		
2		

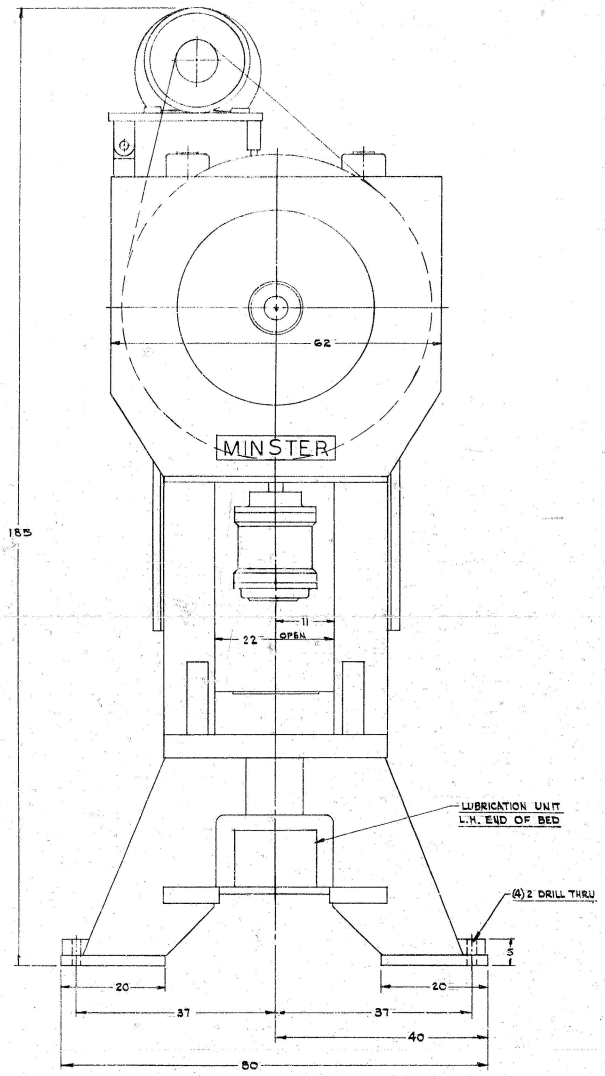

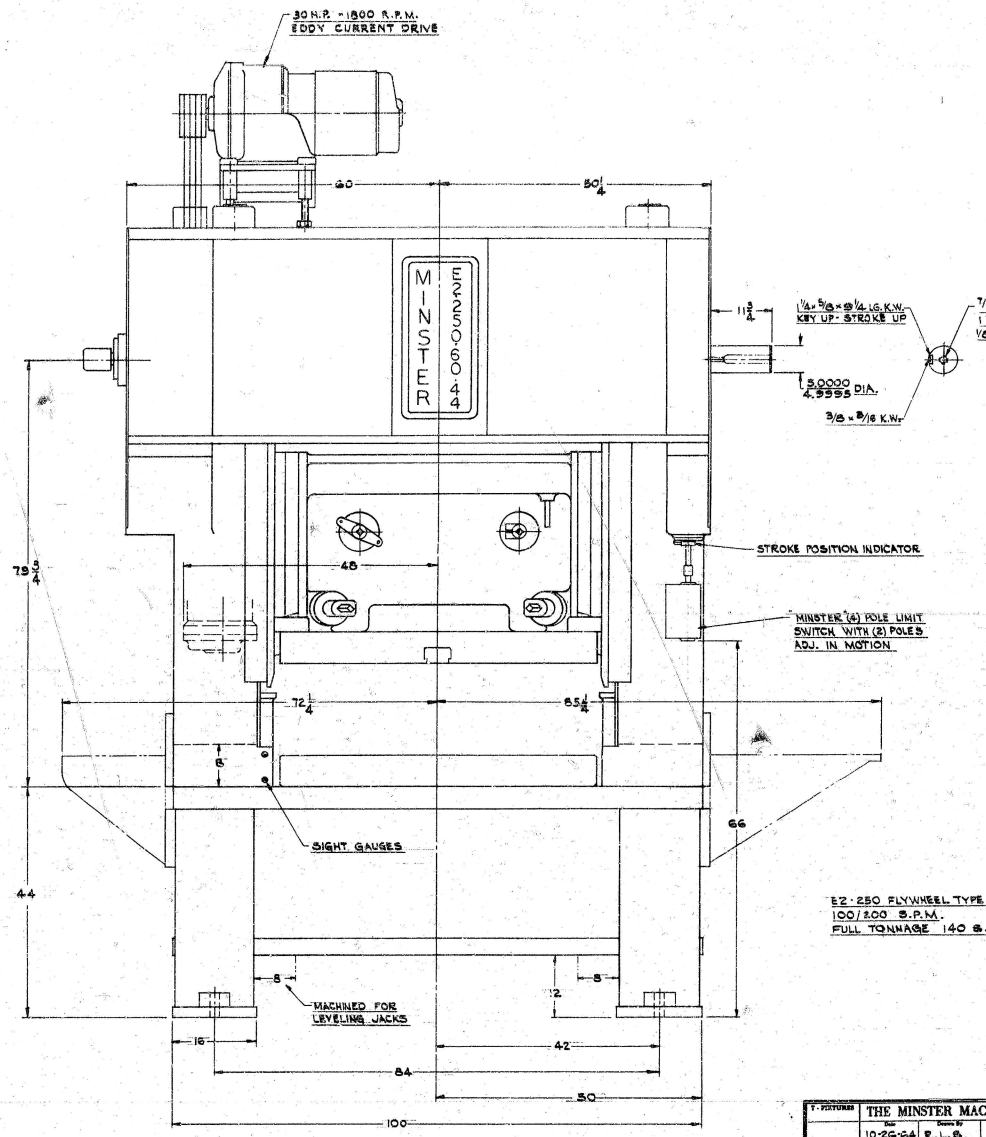

E2-250 FLYWHEEL TYPE MACHINE
100/200 S.P.M.
FULL TONNAGE 140 S.P.M.

T-FIXTURES	THE MINSTER MACHINE CO.		MINSTER, OHIO
	Date 10-26-54	Drawn By R.L.B.	Checked By J.W.C.	Date 3/32
	LAYOUT, GENERAL ASSEMBLY		
	Material		Pattern No.
	No. Required	Dwg. No. V	1035-872	File No.