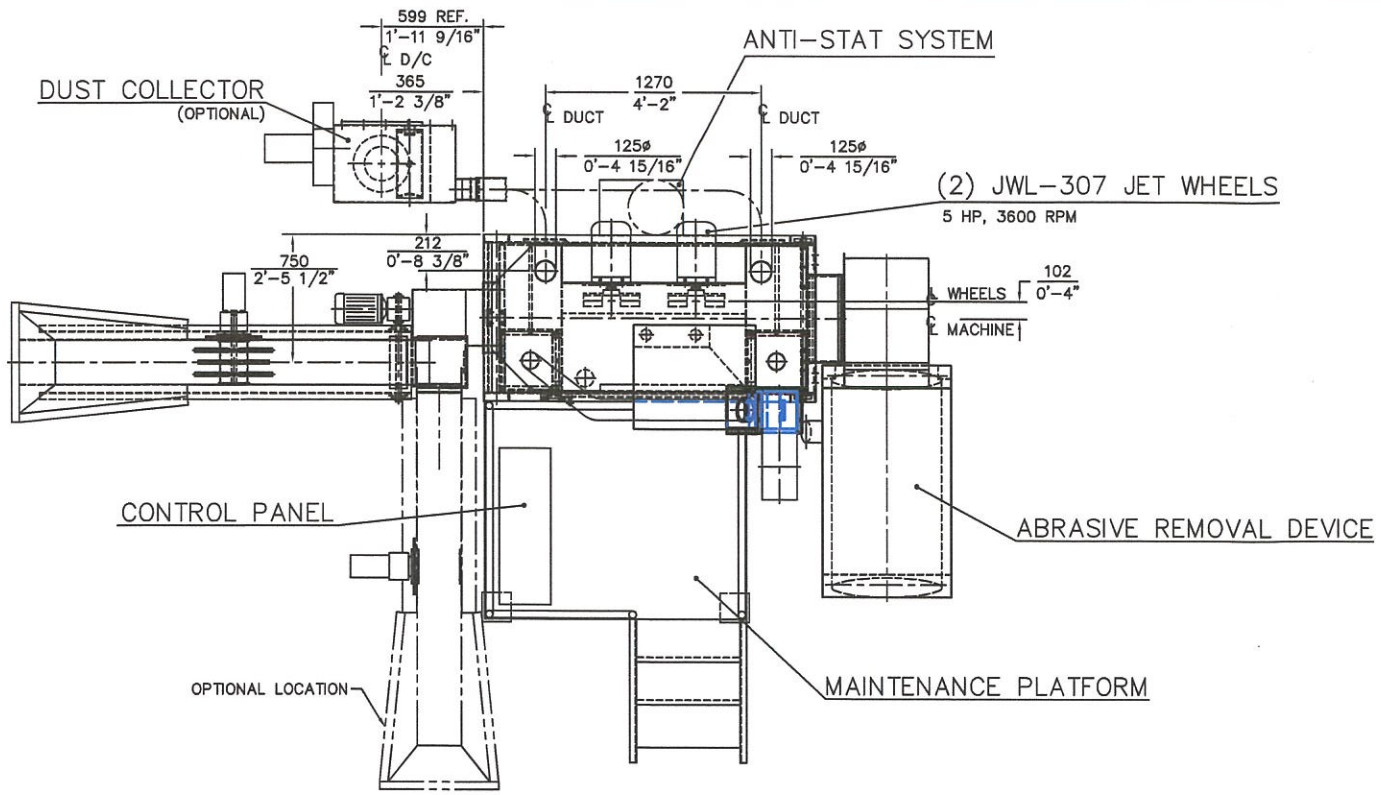

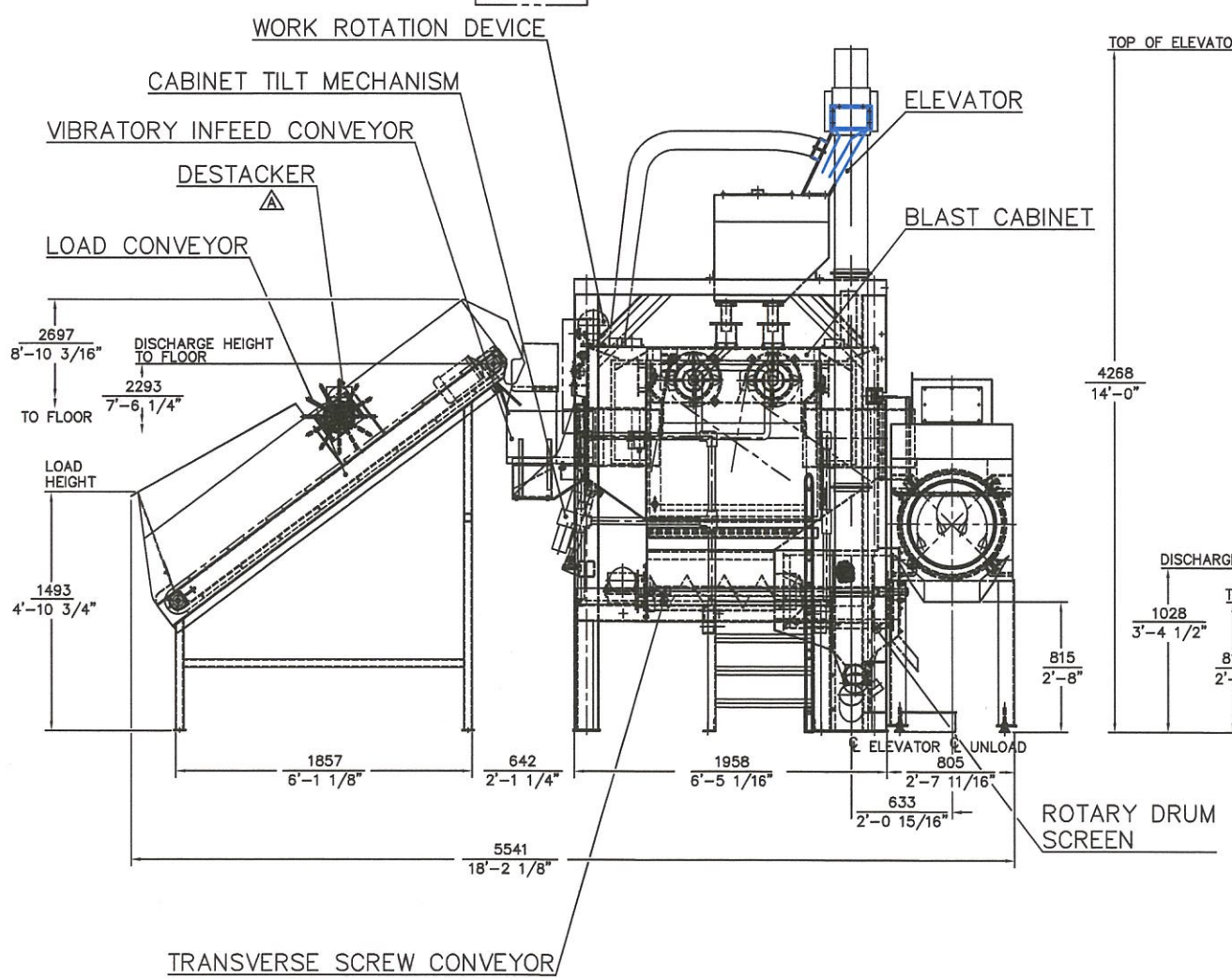

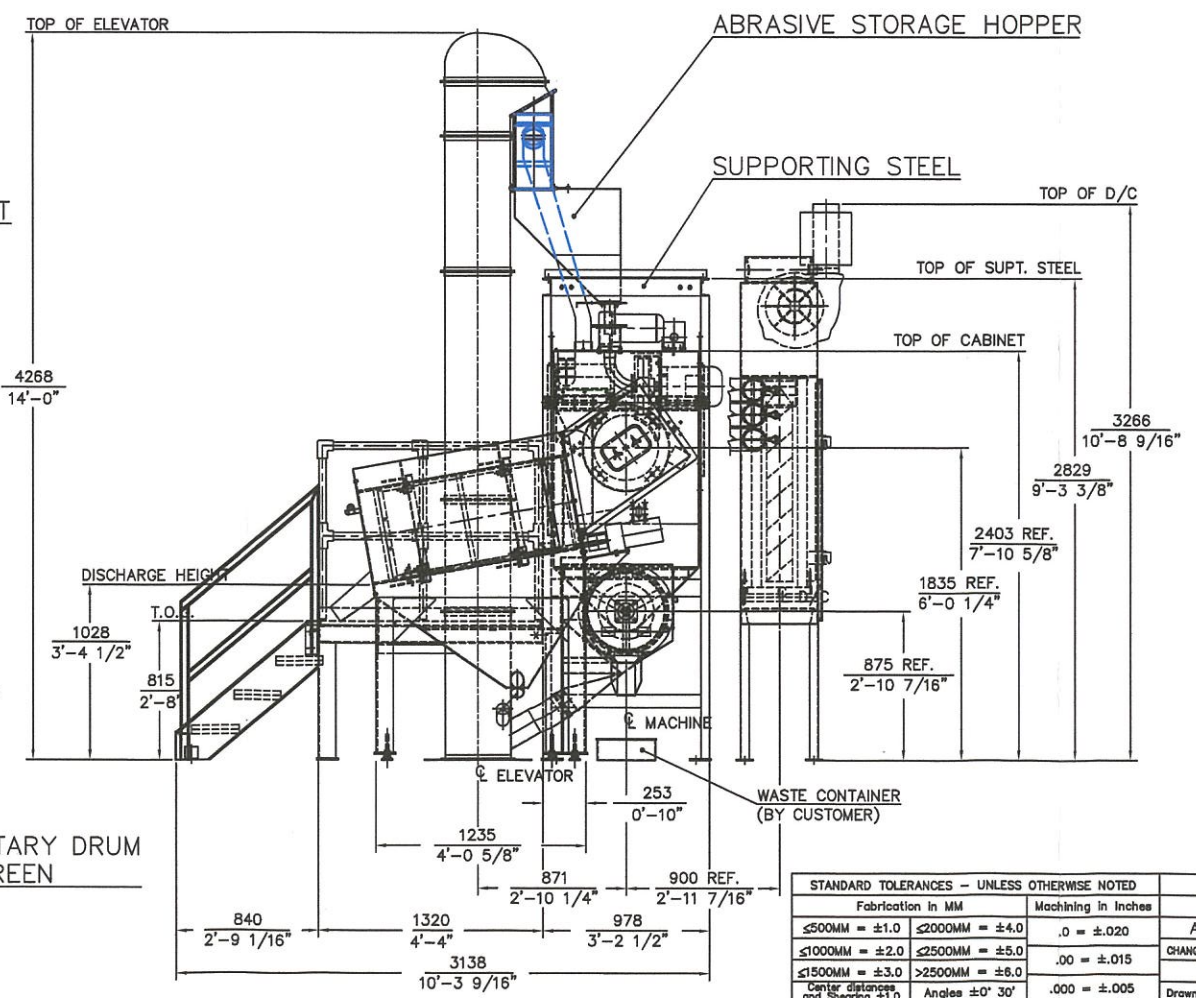

INSTALLATION REQUIREMENTS

ELECTRICAL

MAIN SUPPLY LINE TO CONTROL PANEL TO MACHINE:
17 KVA @ 460 V, 3 PHASE, 60 Hz.
(ADD 3 KVA FOR 2 HP DUST COLLECTOR)

VENTILATION

CABINET: (2) 5"ø LINES W/AIR GATES, 900 CFM.
NO VENTILATION LINES ARE REQUIRED
WITH INTEGRATED DUST COLLECTOR.

COMPRESSED AIR

ANTI-STAT AND BLOW-OFF: 1/2" NPT INLET
3 CFM @ 80-100 PSI.
DUST COLLECTOR: 1 1/2" NPT INLET, 1 CFM @ 30-50 PSI.

NOTE: SOME ITEMS HAVE BEEN REMOVED FOR CLARITY.

STANDARD TOLERANCES – UNLESS OTHERWISE NOTED		
Fabrication in MM		Machining in Inches
≤500MM = ±1.0	≤2000MM = ±4.0	.0 = ±.020
≤1000MM = ±2.0	≤2500MM = ±5.0	.00 = ±.015
≤1500MM = ±3.0	>2500MM = ±6.0	.000 = ±.005
Center distances and Shearing ±1.0	Angles ±0° 30'	

THIS DRAWING AND THE INFORMATION CONTAINED THEREIN ARE OUR PROPERTY. ANY COPYING, TRANSMITTAL TO OTHERS, AND ANY USE IS PROHIBITED EXCEPT WITH OUR WRITTEN PERMISSION.

CHANGE NO.	CHANGES	DATE	NAME	CHECKED BY
A	DESTACKER NOT OPTIONAL	9/05	MrB	

	Name	Date
Drawn by	MBS	10-01-98
Checked by		
Inspected by		
Previous No.	1ABC100005	
Scale	Projection	
1:20		

RÖSLER Metal Finishing USA, LLC
401 Miles Drive, Adrian, Michigan 49221
(517) 263-0502 FAX (517) 263-0038

BC-11

GENERAL ARRANGEMENT

1 A 111 10 0006

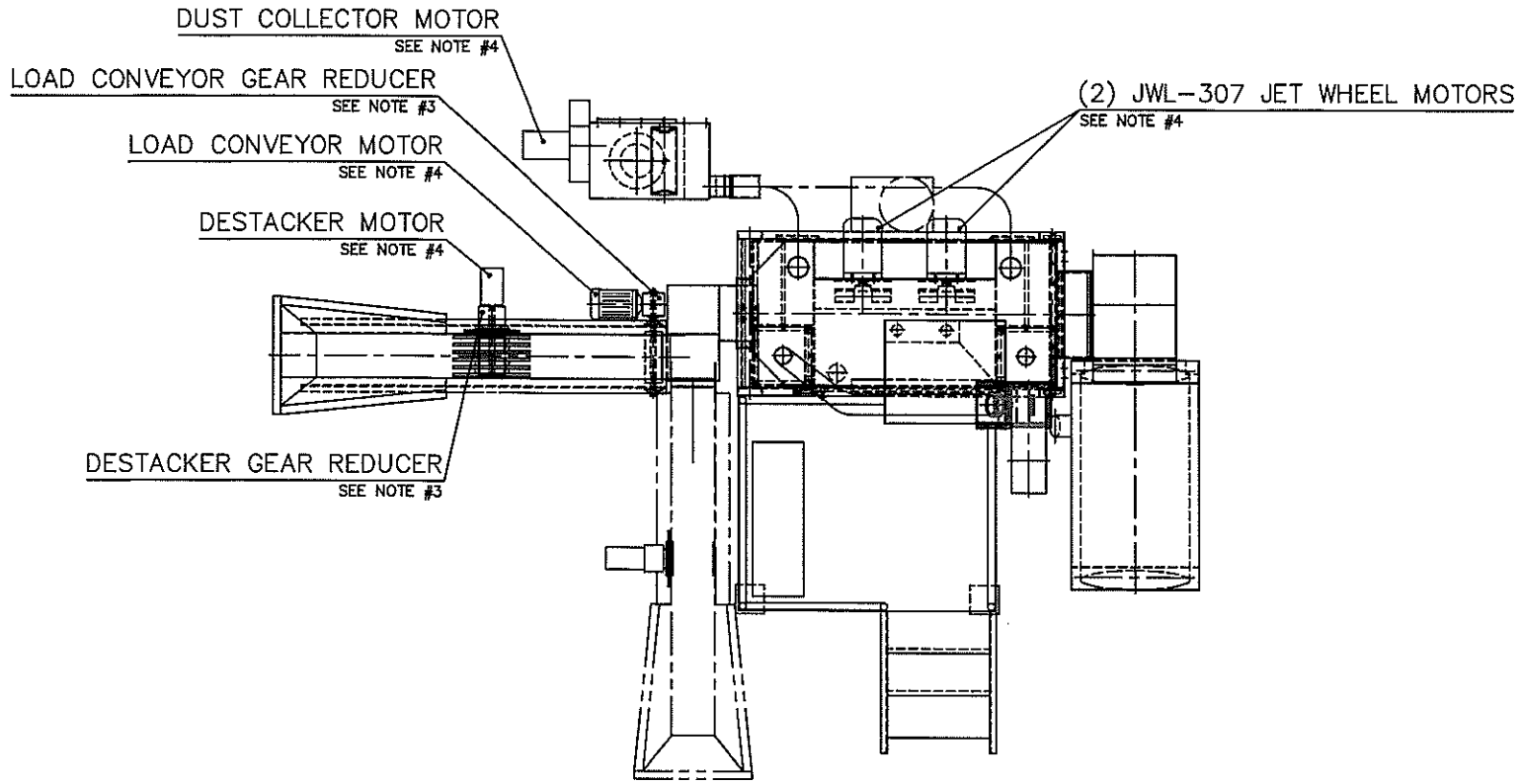

LUBRICATION NOTES BC-11

1) ALL THESE BEARINGS ARE PACKED WITH GREASE BY THE MANUFACTURER. IF THESE BEARINGS SHOW SIGNS OF REQUIRING LUBRICATION, GREASE THRU THE ZERKS PROVIDED.
2) ALL CHAINS AND LINKAGES MUST BE LUBRICATED WITH DRY LUBRICANT TO PREVENT THE ABRASIVE DUST FROM ADHERING TO LUBRICANT.
3) CHECK OIL LEVEL IN GEAR BOXES EVERY SIX MONTHS. REFILL AS REQUIRED WITH APPROPRIATE WEIGHT OIL.
4) MOTORS TO BE LUBRICATED WITH APPROPRIATE LUBRICANT AS FOLLOWS:
   UP TO 326 FRAME – LUBRICATE EVERY 6 MONTHS.
   364 AND ABOVE – LUBRICATE EVERY 3 MONTHS.
5) CLEAN FILTER PERIODICALLY, DRAIN BEFORE ANY ACCUMULATION REACHES BAFFLE.

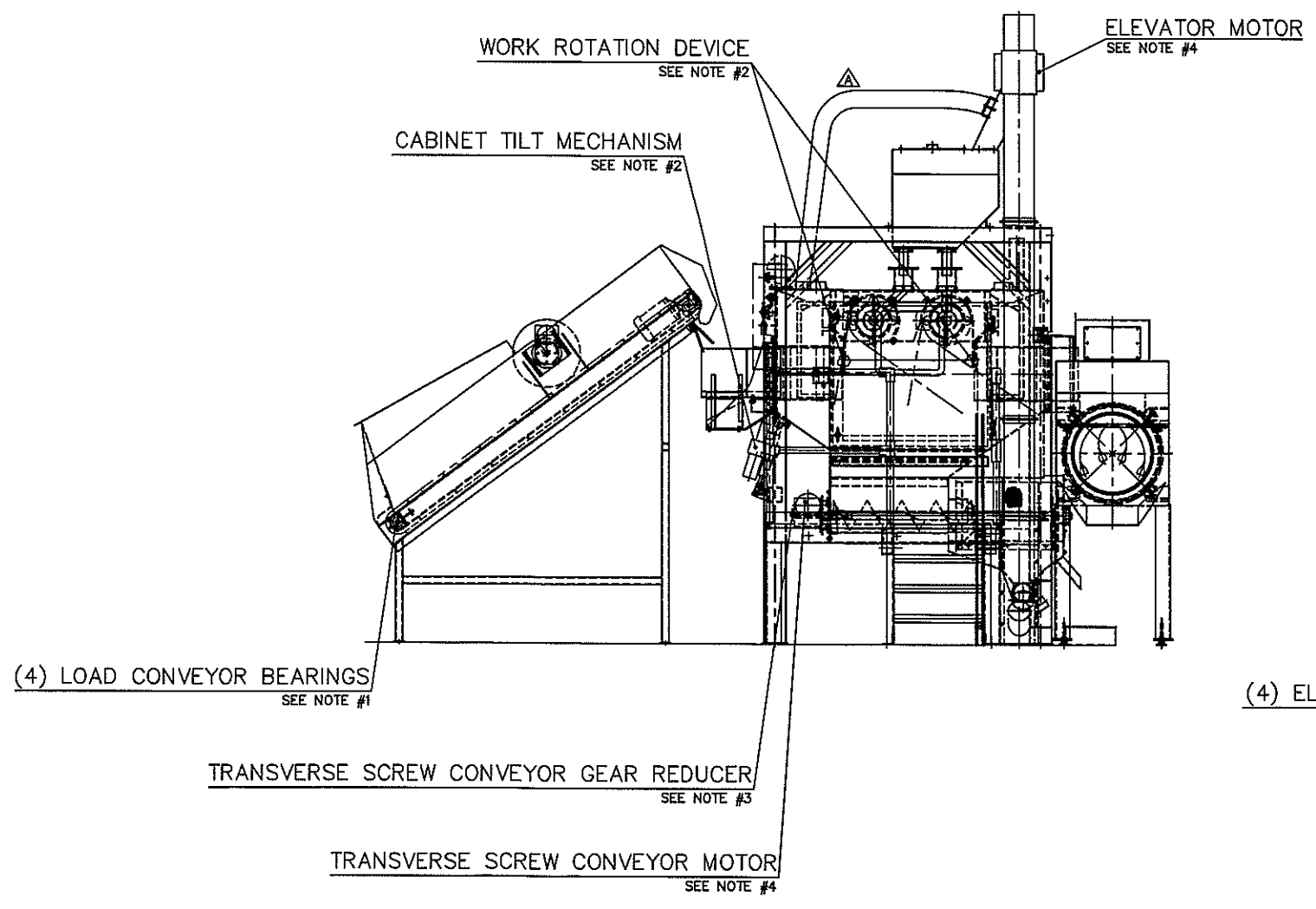

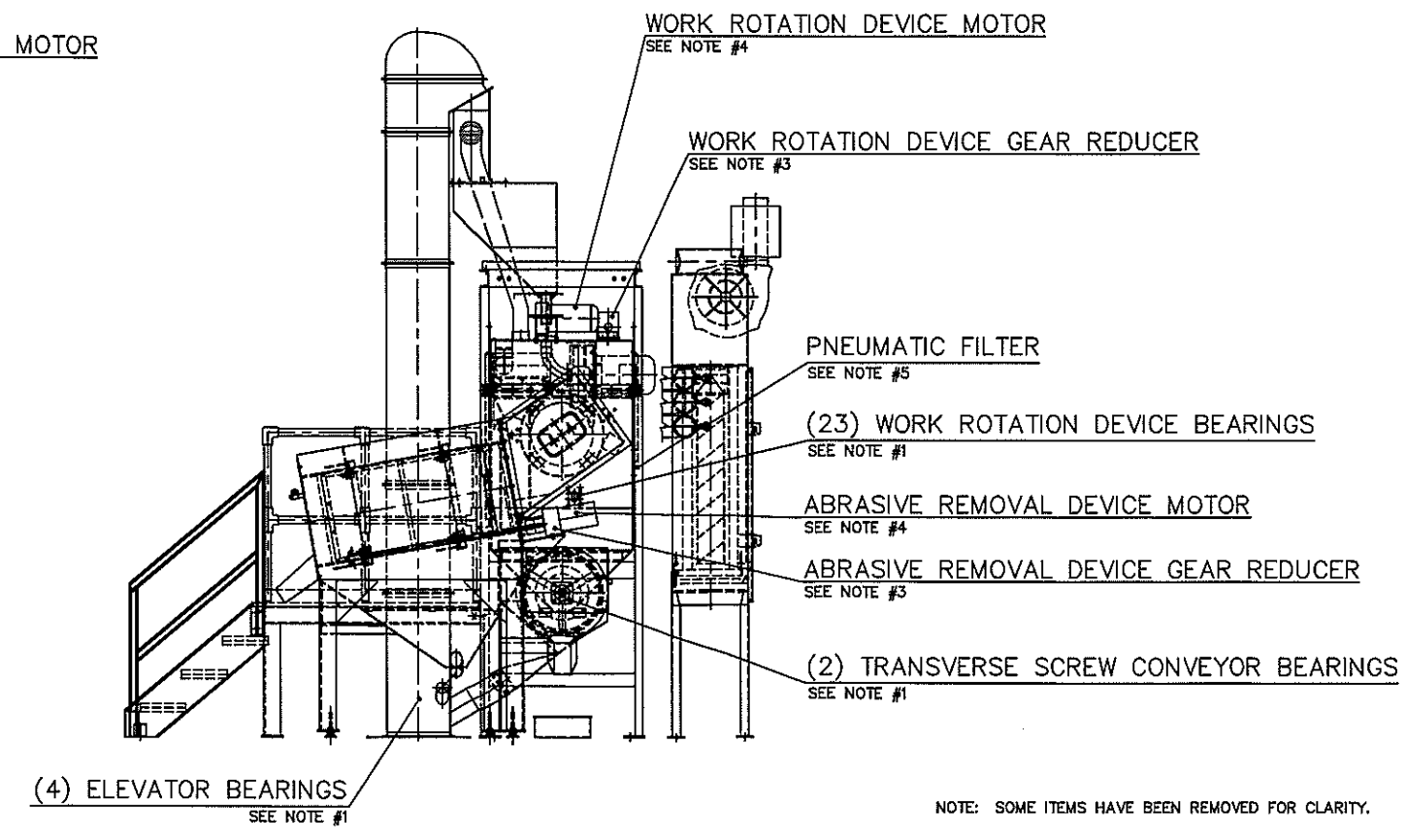

NOTE: SOME ITEMS HAVE BEEN REMOVED FOR CLARITY.

STANDARD TOLERANCES – UNLESS OTHERWISE NOTED		
Fabrication in MM		Machining in Inches
≤500MM = ±1.0	≤2000MM = ±4.0	.0 = ±.020
≤1000MM = ±2.0	≤2500MM = ±5.0	.00 = ±.015
≤1500MM = ±3.0	>2500MM = ±8.0	.000 = ±.005
Center distances and Shearing ±1.0	Angles ±0° 30'	

THIS DRAWING AND THE INFORMATION CONTAINED THEREIN ARE OUR PROPERTY. ANY COPYING, TRANSMITTAL TO OTHERS, AND ANY USE IS PROHIBITED EXCEPT WITH OUR WRITTEN PERMISSION.

CHANGE NO.	CHANGES	DATE	NAME	CHECKED BY
A	UPDATED DUCTWORK FROM DISCHARGE CHUTE	11/11/15	MrB	

	Name	Date
Drawn by	MBS	10-01-98
Checked by		
Inspected by		
Previous No.	10BC120005	
Scale	Projection	
1:20		

RÖSLER Metal Finishing USA, LLC
401 Miles Drive, Adrian, Michigan 49221
(517) 263-0502 FAX (517) 263-0038

BC-11

LUBRICATION

1 A BC 12 0006

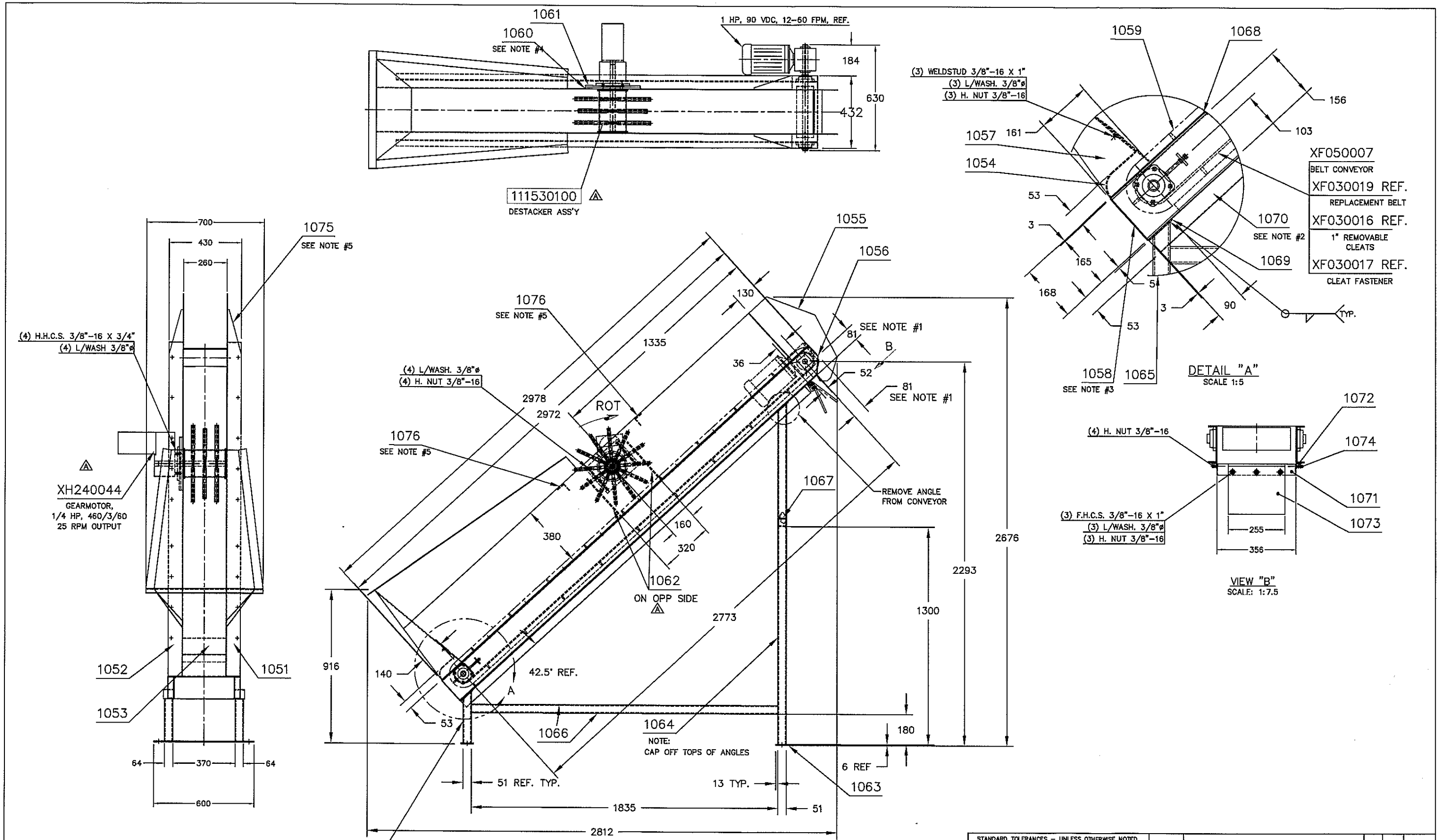

5) WELD TO SIDES AFTER ASSEMBLY.
4) WELD 1060 TO 1051 ONLY.
3) MATCH DRILL ITEM #1058 TO CONV.
2) REMOVE BOTTOM OF XF050006. LOCATE AND WELD 1070 IN ITS PLACE.
1) CUT UPPER END OF BELT CONVEYOR XF050007 AS SHOWN.

NOTES:

STANDARD TOLERANCES – UNLESS OTHERWISE NOTED		
Fabrication in MM		Machining in Inches
≤500MM = ±1.0	≤2000MM = ±4.0	.0 = ±.020
≤1000MM = ±2.0	≤2500MM = ±5.0	.00 = ±.015
≤1500MM = ±3.0	>2500MM = ±6.0	.000 = ±.005
Center distances and Shearing ±1.0	Angles ±0° 30'	

THIS DRAWING AND THE INFORMATION CONTAINED THEREIN ARE OUR PROPERTY. ANY COPYING, TRANSMITTAL TO OTHERS, AND ANY USE IS PROHIBITED EXCEPT WITH OUR WRITTEN PERMISSION.

CHANGE NO.	CHANGES	DATE	NAME	CHECKED BY
A	MOVED 111530100 TO OPP. SIDE	3/08	CAB	

	Name	Date
Drawn by	TABER	05/10/06
Checked by		
Inspected by		
Previous No.		
Scale	Projection	
1:10		

RÖSLER Metal Finishing USA, LLC
401 Miles Drive, Adrian, Michigan 49221
(517) 263-0502 FAX (517) 263-0038

LOAD CONVEYOR W/DESTACKER ASS'Y

BC-11

1 A 111 75 1050

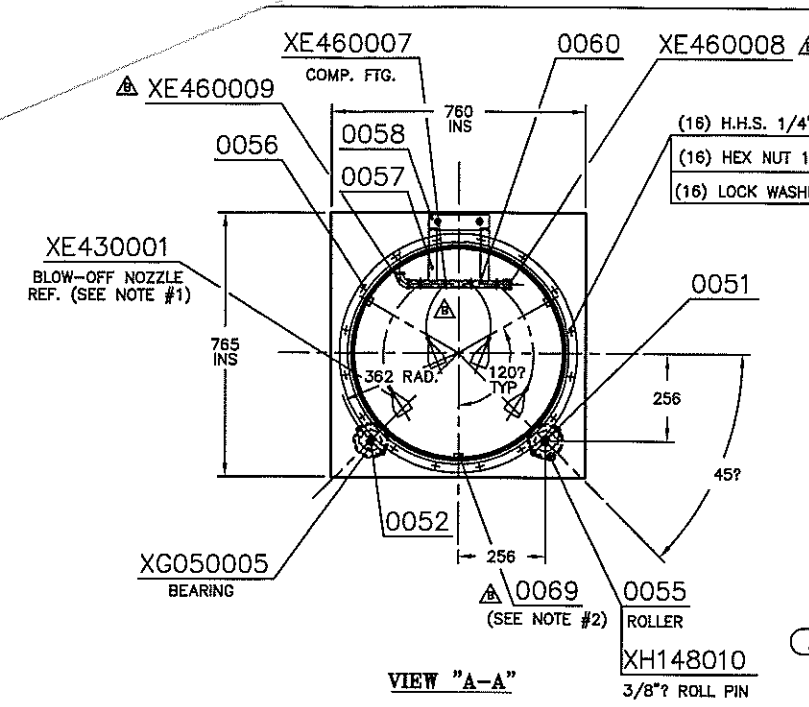

VIEW "A–A"

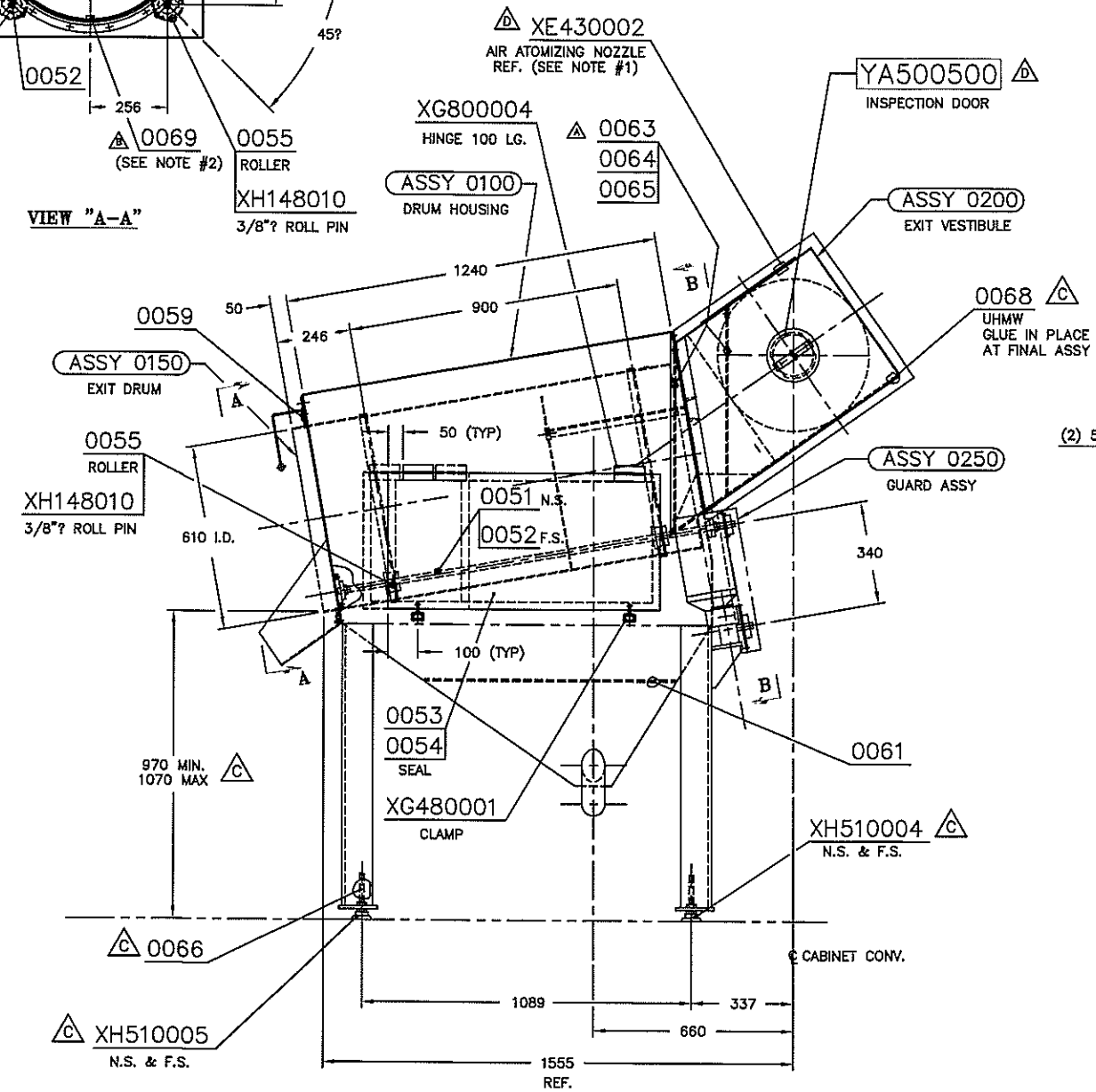

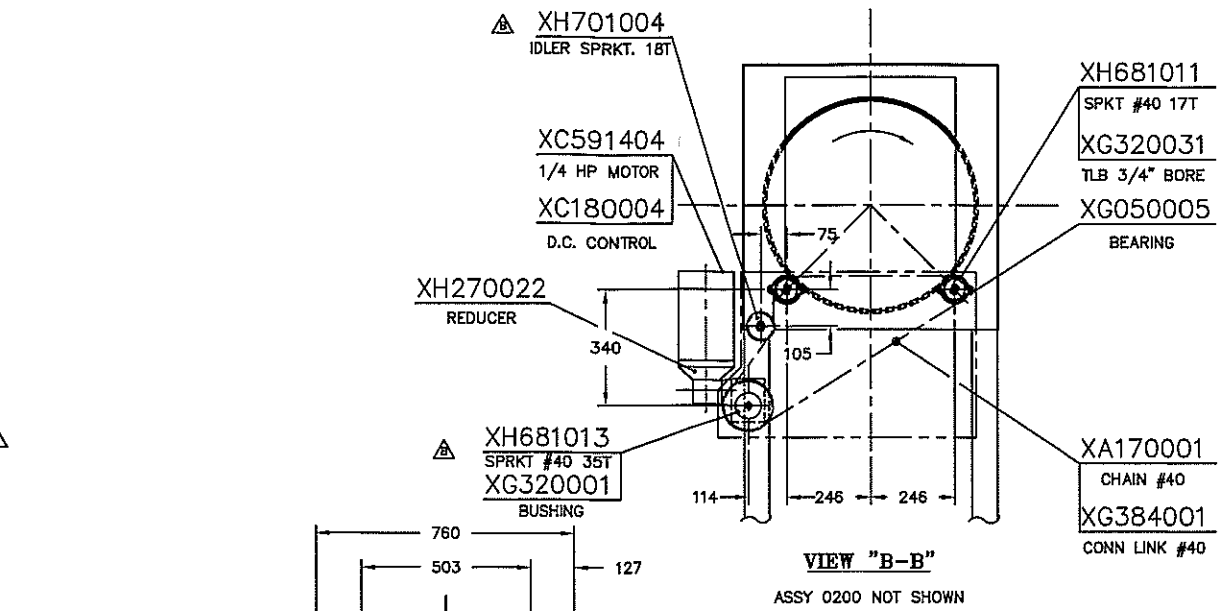

VIEW "B–B"

ASSY 0200 NOT SHOWN

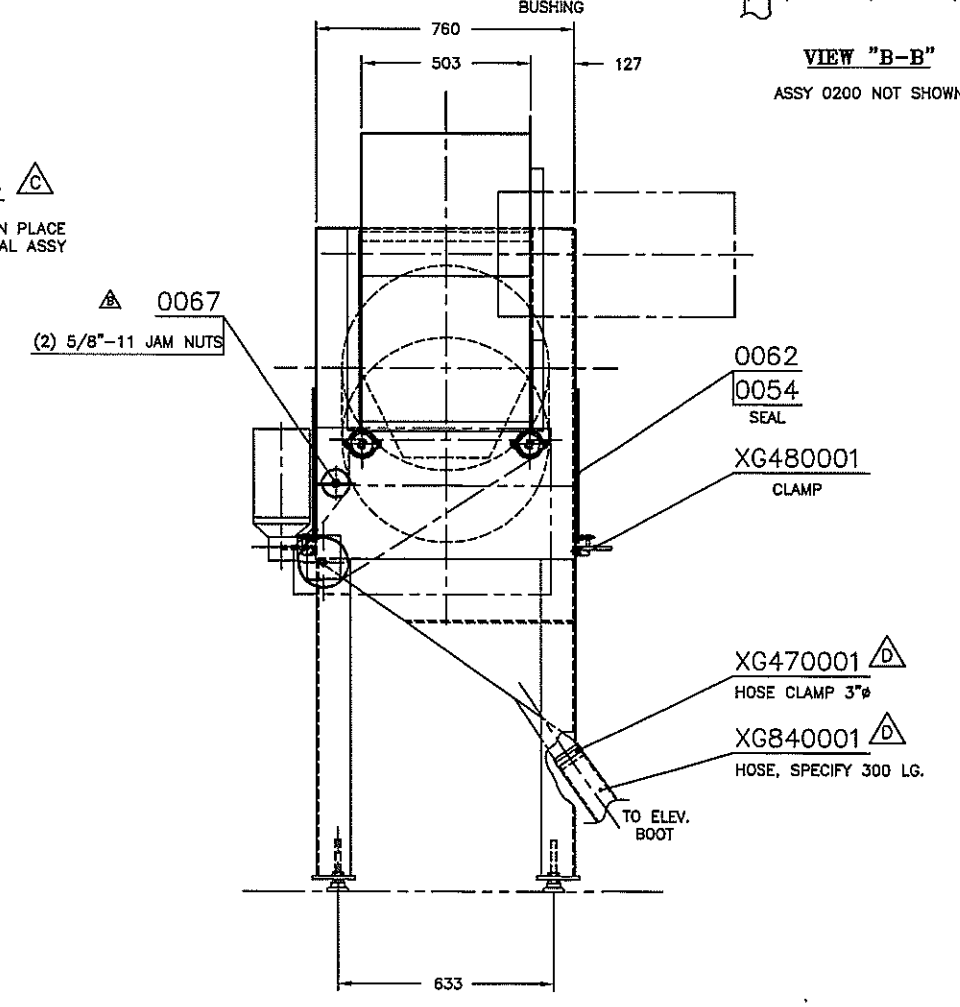

NOTES:

1) FOR XE430001, XE430002, & 1/4"? COPPER TUBING SEE SCHEMATIC DRAWING 20BC180001 (D)
2) DRILL AND TAP (4) 10–24 DIA. HOLES IN 0060 ⊙ ASSEMBLY

STANDARD TOLERANCES IN MM	
Fabrication	Machining
Weldments Up To	.0 =± .5
2500MM =± .5	.00 =± .35
>2500MM =± 4.0	.000 =± .13
Center distances and Shearing ±.8	Angles ± 0° 30'
Mach. Req.	Special Tolerances

THIS DRAWING AND THE INFORMATION CONTAINED THEREIN ARE OUR PROPERTY. ANY COPYING, TRANSMITTAL TO OTHERS, AND ANY USE IS PROHIBITED EXCEPT WITH OUR WRITTEN PERMISSION.

CHANGE NO.	CHANGES	DATE	NAME	CHECKED BY
D	ADDED YA500500, XE430002, XG480001, & XG470001.	8/91	JW	
C	ADDED XH510004, XH510005, 0068, & 0066	4/91	JW	
B	REVISED PER AS BUILT	2/91	SWS	
A	ADDED 0063, 0064, 0065	2–91	SWS	

	Name	Date
Drawn by	SCOTT	11/26/90
Checked by		
Inspected by		
Previous No.		
Scale	1:10	
Projection		

JET WHEELBLAST EQUIPMENT
A division of B&U Corporation
401 Miles Dr., Adrian, Mich. 49221
(517) 263-0502

ABRASIVE REMOVAL ASSY BC–11

1 D B C 5 1 0 0 5 0

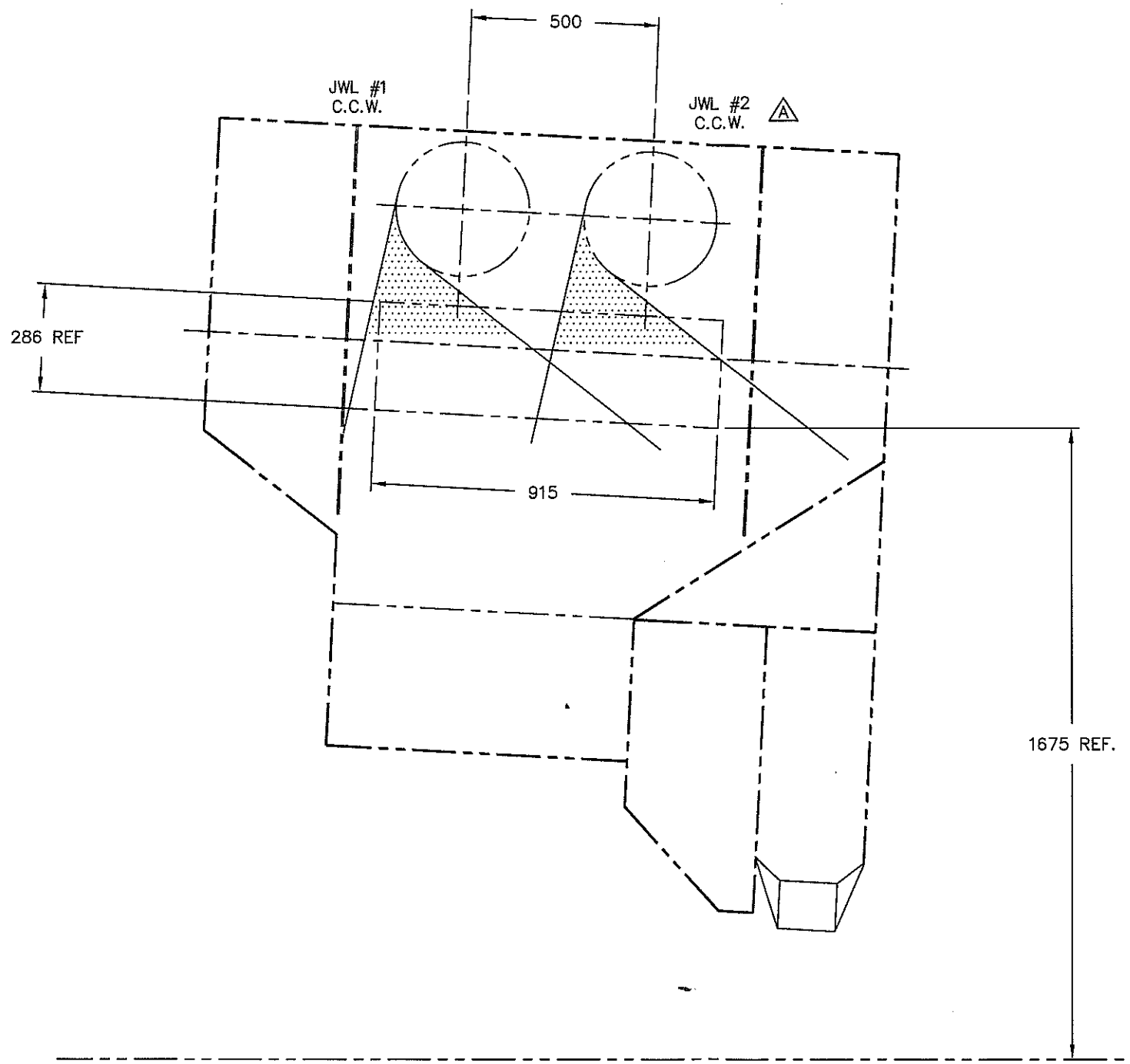

STANDARD TOLERANCES – UNLESS OTHERWISE NOTED		
Fabrication in MM		Machining in Inches
≤500MM = ±1.0	≤2000MM = ±4.0	.0 = ±.020
≤1000MM = ±2.0	≤2500MM = ±5.0	.00 = ±.015
≤1500MM = ±3.0	>2500MM = ±6.0	
Center distances and Shearing ±1.0	Angles ±0° 30'	.000 = ±.005

THIS DRAWING AND THE INFORMATION CONTAINED THEREIN ARE OUR PROPERTY. ANY COPYING, TRANSMITTAL TO OTHERS, AND ANY USE IS PROHIBITED EXCEPT WITH OUR WRITTEN PERMISSION.

CHANGE NO.	CHANGES	DATE	NAME	CHECKED BY
A	JWL #2 WAS C.W.	11/96	MBS	

	Name	Date
Drawn by	JMW	11/30/90
Checked by		
Inspected by		
Previous No.		
Scale	Projection	
1:10		

RÖSLER Metal Finishing USA, LLC
401 Miles Drive, Adrian, Michigan 49221
(517) 263-0502 FAX (517) 263-0038

BC-11

BLAST PATTERN

2 A 111 05 0001

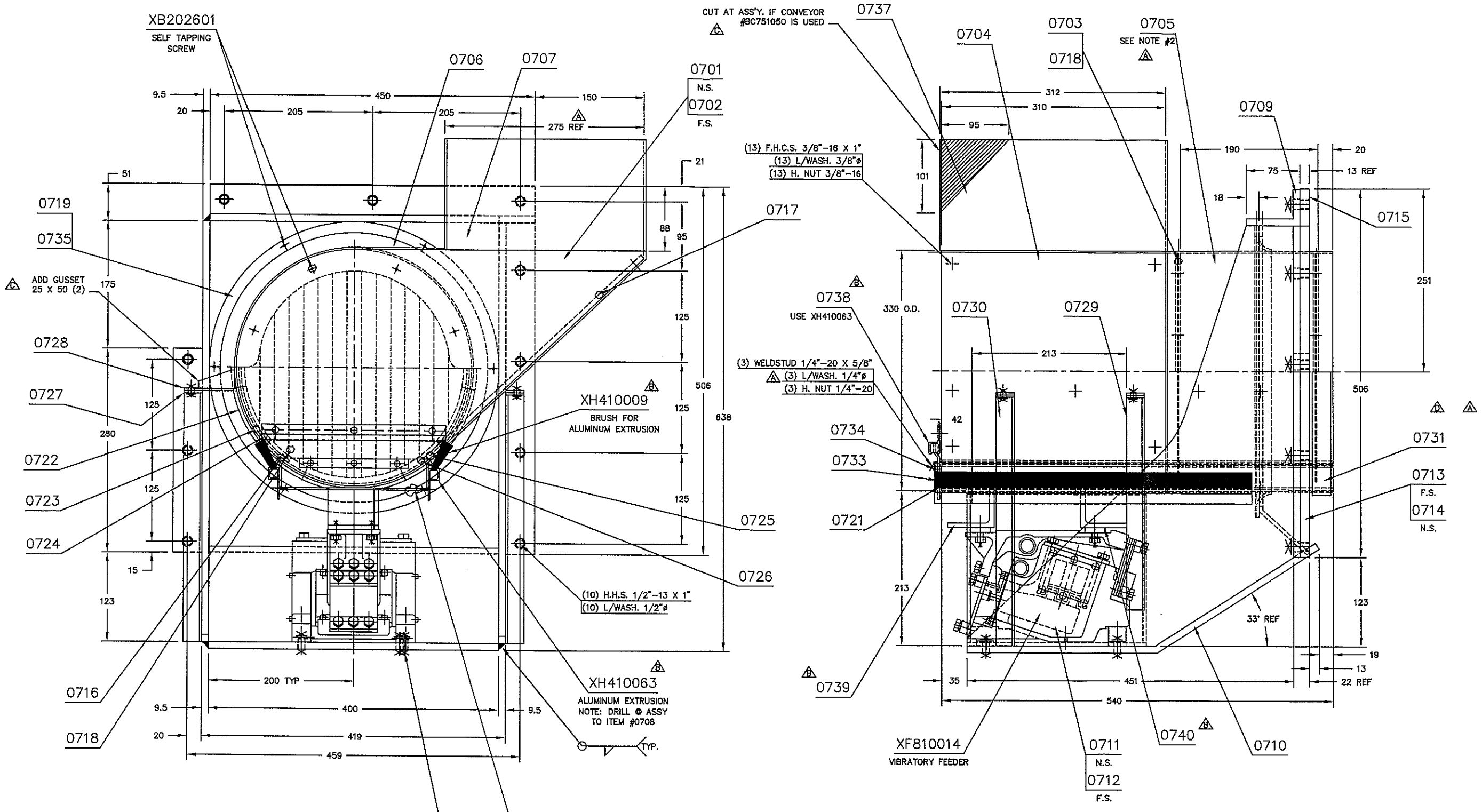

CHANGE NO.	CHANGES	DATE	NAME	CHECKED BY
D	REMOVED 0732	4/08	CAB	
C	ADDED NOTE & GUSSET	11/06	CAB	
B	ADD 0737, 0738, 0739, 0740, XH410009, & XH410063	1/10/05	MrB	
A	ADDED NOTE #2, WELDSTUD INFON REVS'D NOTE #1 & ADDED DIM 275 REF	5/19/98	NAM	

STANDARD TOLERANCES – UNLESS OTHERWISE NOTED			
Fabrication in MM		Machining in Inches	
≤500MM = ±1.0	≤2000MM = ±4.0	.0 = ±.020	
≤1000MM = ±2.0	≤2500MM = ±5.0	.00 = ±.015	
≤1500MM = ±3.0	>2500MM = ±6.0	.000 = ±.005	
Center distances and Shearing ±1.0	Angles ±0° 30'		

	Name	Date
Drawn by	MBS	11/19/97
Checked by		
Inspected by		
Previous No.		
Scale	Projection	
1:2.5		

THIS DRAWING AND THE INFORMATION CONTAINED THEREIN ARE OUR PROPERTY. ANY COPYING, TRANSMITTAL TO OTHERS, AND ANY USE IS PROHIBITED EXCEPT WITH OUR WRITTEN PERMISSION.

RÖSLER Metal Finishing USA, LLC
401 Miles Drive, Adrian, Michigan 49221
(517) 263-0502 FAX (517) 263-0038

VIBRATORY INFEED ASS'Y

BC-11

1 D 111 20 0700

NOTES:

2) TRANSFER HOLES FROM 0732 TO 0705, DRILL & TAP #10-24, GRIND FLUSH ON THE INSIDE OF THE BARREL.

1) WELD ITEM 0708 TO 0722, ON SIDES PLUG WELD TOGETHER. WELS ITEMS 0720 TO 0708 OUTSIDE BETWEEN BOLT HOLES ONLY.

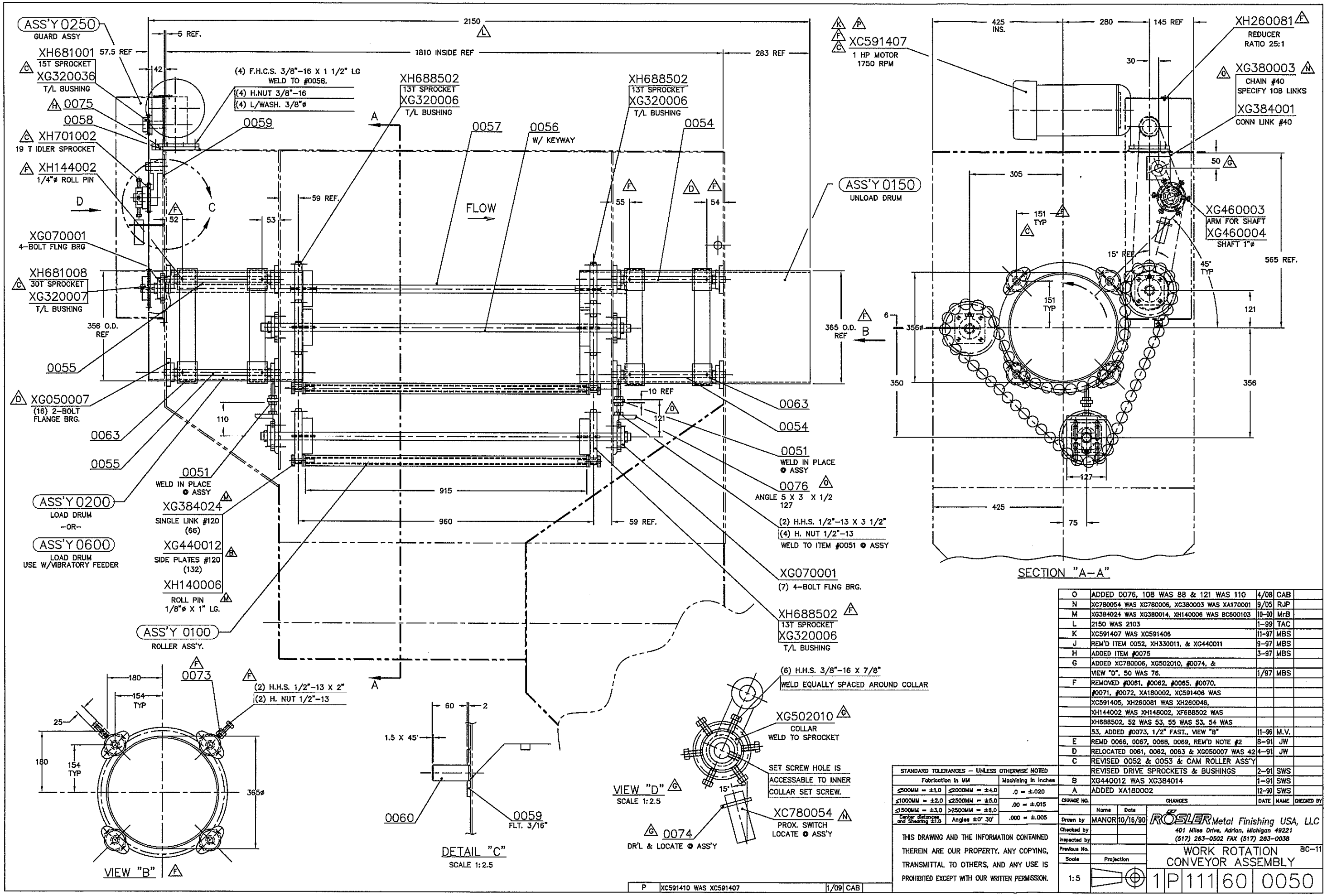

O	ADDED 0076, 108 WAS 88 & 121 WAS 110	4/08	CAB	
N	XC780054 WAS XC780006, XG380003 WAS XA170001	9/05	RJP	
M	XG384024 WAS XG380014, XH140006 WAS BC600103	10-00	MrB	
L	2150 WAS 2103	1-99	TAC	
K	XC591407 WAS XC591406	11-97	MBS	
J	REM'D ITEM 0052, XH330011, & XG440011	9-97	MBS	
H	ADDED ITEM #0075	3-97	MBS	
G	ADDED XC780006, XG502010, #0074, &			
	VIEW "D", 50 WAS 76.	1/97	MBS	
F	REMOVED #0061, #0062, #0065, #0070,			
	#0071, #0072, XA180002, XC591406 WAS			
	XC591405, XH260081 WAS XH260046,			
	XH144002 WAS XH148002, XF688502 WAS			
	XH688502, 52 WAS 53, 55 WAS 53, 54 WAS			
	53, ADDED #0073, 1/2" FAST., VIEW "B"	11-96	M.V.	
E	REMD 0066, 0067, 0068, 0069, REM'D NOTE #2	8-91	JW	
D	RELOCATED 0061, 0062, 0063 & XG050007 WAS 42	4-91	JW	
C	REVISED 0052 & 0053 & CAM ROLLER ASS'Y			
	REVISED DRIVE SPROCKETS & BUSHINGS	2-91	SWS	
B	XG440012 WAS XG384014	1-91	SWS	
A	ADDED XA180002	12-90	SWS	
CHANGE NO.	CHANGES	DATE	NAME	CHECKED BY

STANDARD TOLERANCES – UNLESS OTHERWISE NOTED		
Fabrication in MM		Machining in Inches
≤500MM = ±1.0	≤2000MM = ±4.0	.0 = ±.020
≤1000MM = ±2.0	≤2500MM = ±5.0	.00 = ±.015
≤1500MM = ±3.0	>2500MM = ±8.0	.000 = ±.005
Center distances and Shearing ±1.0	Angles ±0° 30'	

THIS DRAWING AND THE INFORMATION CONTAINED THEREIN ARE OUR PROPERTY. ANY COPYING, TRANSMITTAL TO OTHERS, AND ANY USE IS PROHIBITED EXCEPT WITH OUR WRITTEN PERMISSION.

	Name	Date
Drawn by	MANOR	10/16/90
Checked by		
Inspected by		
Previous No.		
Scale	Projection	
1:5		

RÖSLER Metal Finishing USA, LLC
401 Miles Drive, Adrian, Michigan 49221
(517) 263-0502 FAX (517) 263-0038

WORK ROTATION CONVEYOR ASSEMBLY

BC-11

1 P 111 60 0050

P	XC591410 WAS XC591407	1/09	CAB

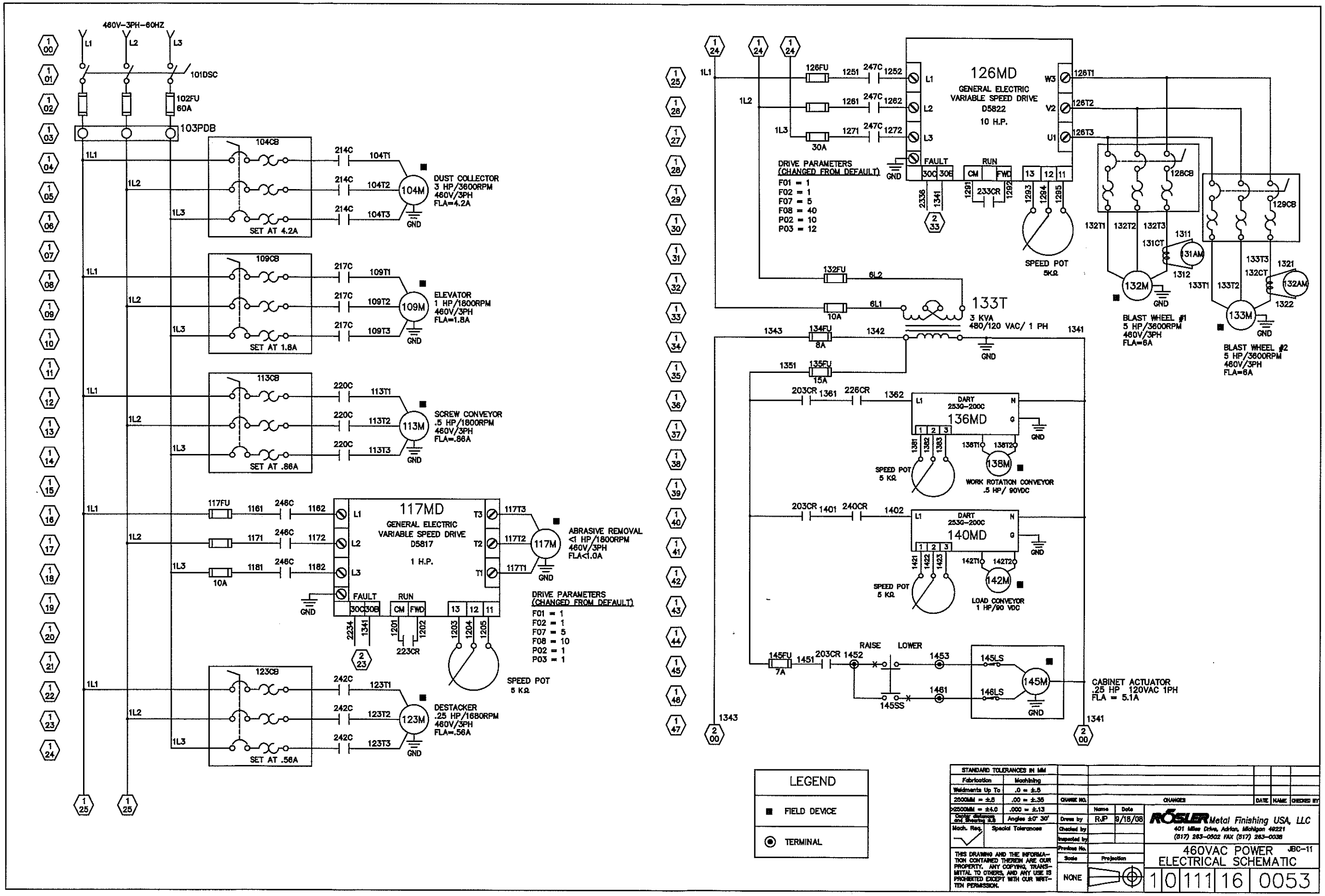

V:\11\111\1111x\111160053.dwg, 4/15/2009 10:21:51 AM, Adobe PDF

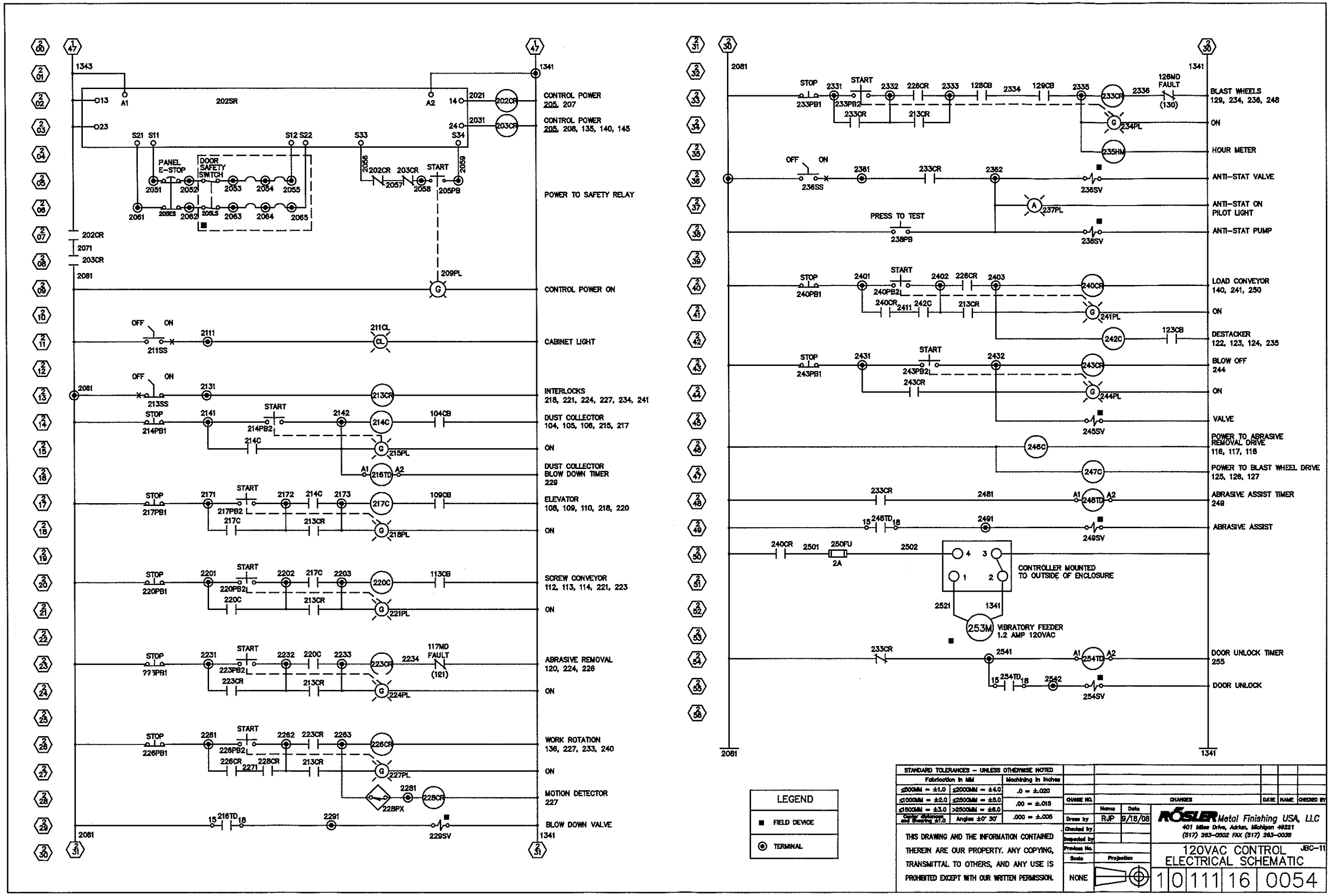

V:\11\111\1111x\111160054.dwg, 4/15/2009 10:29:53 AM, Adobe PDF

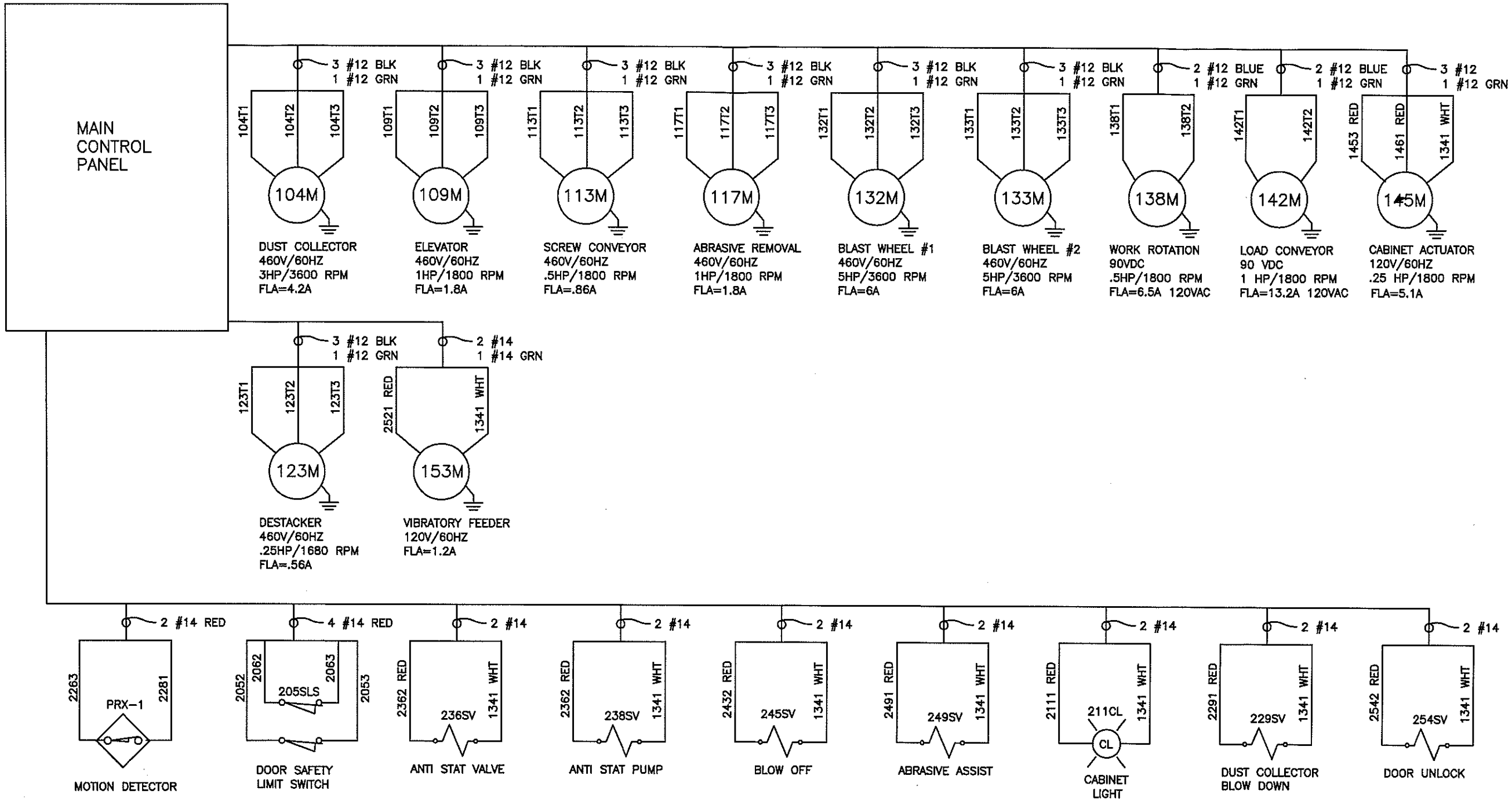

STANDARD TOLERANCES — UNLESS OTHERWISE NOTED		
Fabrication In MM		Machining In Inches
≤300MM = ±1.0	≤2000MM = ±4.0	.0 = ±.020
≤1000MM = ±2.0	≤2500MM = ±5.0	.00 = ±.015
≤1500MM = ±3.0	>2500MM = ±6.0	.000 = ±.005
Center distances and Bearing ±1.0	Angles ±0° 30'	

THIS DRAWING AND THE INFORMATION CONTAINED THEREIN ARE OUR PROPERTY. ANY COPYING, TRANSMITTAL TO OTHERS, AND ANY USE IS PROHIBITED EXCEPT WITH OUR WRITTEN PERMISSION.

CHANGE NO.	CHANGES	DATE	NAME	CHECKED BY

	Name	Date
Drawn by	RJP	9/18/06
Checked by		
Inspected by		
Previous No.		
Scale	Projection	
NONE		

RÖSLER Metal Finishing USA, LLC
401 Miles Drive, Adrian, Michigan 49221
(517) 263-0502 FAX (517) 263-0038

FIELD DEVICE ELECTRICAL SCHEMATIC

JBC-11

1 0 1 1 1 1 6 0055

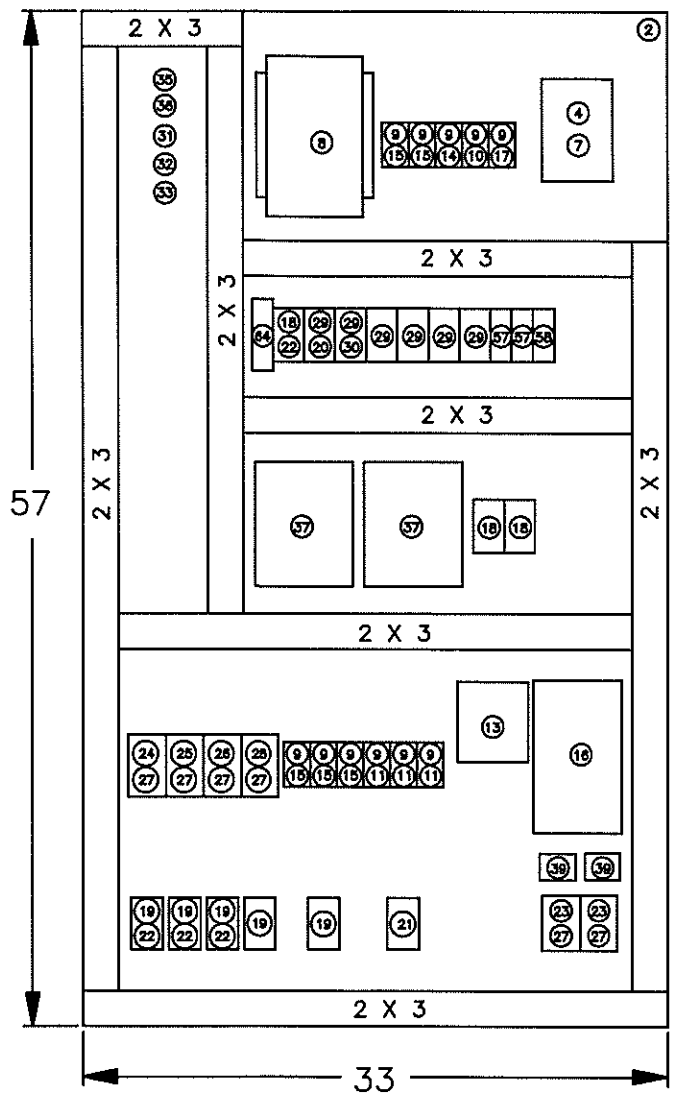

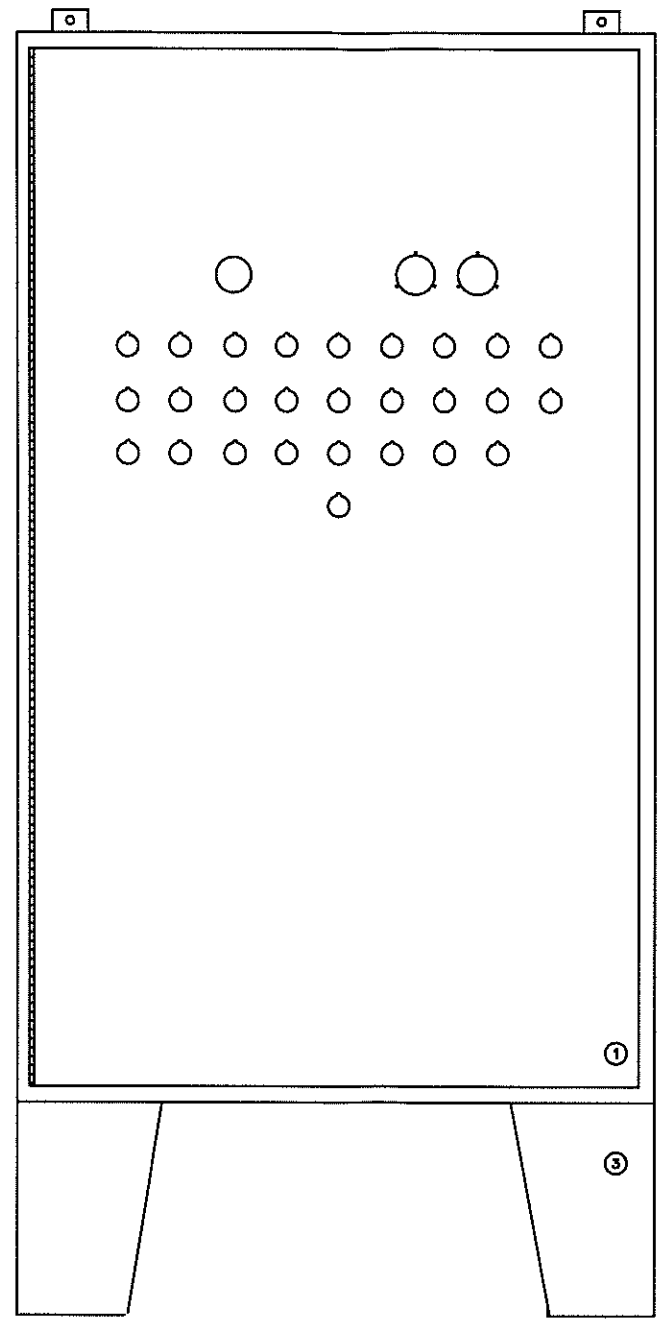

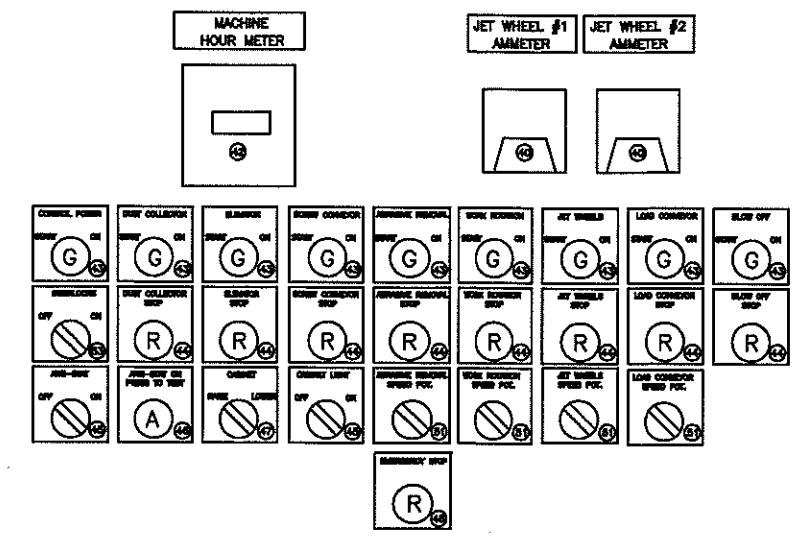

STANDARD TOLERANCES – UNLESS OTHERWISE NOTED		
Fabrication In MM		Machining In Inches
≤500MM = ±1.0	≤2000MM = ±4.0	.0 = ±.020
≤1000MM = ±2.0	≤2500MM = ±5.0	.00 = ±.015
≤1500MM = ±3.0	>2500MM = ±6.0	.000 = ±.005
Center distances and Shearing ±1.0	Angles ±0° 30'	

THIS DRAWING AND THE INFORMATION CONTAINED THEREIN ARE OUR PROPERTY. ANY COPYING, TRANSMITTAL TO OTHERS, AND ANY USE IS PROHIBITED EXCEPT WITH OUR WRITTEN PERMISSION.

CHANGE NO.	CHANGES	DATE	NAME	CHECKED BY

	Name	Date
Drawn by	RJP	9/18/08
Checked by		
Inspected by		
Previous No.		
Scale	Projection	
NONE		

RÖSLER Metal Finishing USA, LLC
401 Miles Drive, Adrian, Michigan 49221
(517) 263-0502 FAX (517) 263-0038

JBC-11

PANEL LAYOUT

1 0 1 1 1 1 6 0056

BILL OF MATERIAL

MACHINE MODEL: JBC–11 **CUSTOMER:** G.E. CARIBE

NO.	QTY.	CATALOG NUMBER	DESCRIPTION	MANUFACTURER	SYMBOL
1	1	SCE–603612LP	60Hx36Wx12D NEMA 12 PANEL	SAGINAW	PNL
2	1	SCE–60P36	BACKPLATE	SAGINAW	PNL
3	1	SCE–FK1212	FLOOR STAND KIT	SAGINAW	PNL
4	1	FD160J	60A DISCONNECT	G.E.	101DSC
5	1	FD1S360	SHAFT	G.E.	101DSC
6	1	FD1HA4XRY	HANDLE	G.E.	101DSC
7	3	LPJ–60SP	60 AMP FUSES	BUSSMAN	102FU
8	1	9T58B55	3KVA 480–120VAC TRANSFORMER	G.E.	133T
9	11	JTN60030	1 POLE FUSE HOLDERS	BUSSMAN	117FU,126FU,132FU,134FU,135FU,145FU
10	1	LPJ–15SP	15 AMP FUSE	BUSSMAN	135FU
11	3	LPJ–30SP	30 AMP FUSES	BUSSMAN	126FU
12					
13	1	D7219	1 HP VARIABLE SPEED DRIVE	G.E.	117MD
14	1	LPJ–8SP	8 AMP FUSE	BUSSMAN	134FU
15	5	LPJ–10SP	10 AMP FUSES	BUSSMAN	117FU,132FU
16	1	D5822	10 HP VARIABLE SPEED DRIVE	G.E.	126MD
17	1	LPJ–7SP	7 AMP FUSE	BUSSMAN	145FU
18	3	CL25A310TJ	17.5 AMP CONTACTOR	G.E.	203CR,226CR,240CR
19	5	CL00A310TJ	10 AMP CONTACTOR	G.E.	214C,217C,220C,246C,242C
20	1	BRLL11	AUX. CONTACT 1NO–1NC SIDE	G.E.	202CR
21	1	CL04A310MJ	32 AMP CONTACTOR	G.E.	247C
22	4	BCLL11	AUX. CONTACT 1NO–1NC SIDE	G.E.	203CR,214C,217C,220C
23	2	GPS1BSAK	6.3–10 AMP MOTOR PROTECTOR	G.E.	128CB,129CB
24	1	GPS1BSAJ	4–6.3 AMP MOTOR PROTECTOR	G.E.	104CB
25	1	GPS1BSAG	1.6–2.5 AMP MOTOR PROTECTOR	G.E.	109CB
26	1	GPS1BSAE	.63–1 AMP MOTOR PROTECTOR	G.E.	113CB
27	6	72AXA11	AUX. CONTACT 1NO–1NC	G.E.	104CB,109CB,113CB,123CB,128CB,129CB
28	1	GPS1BSAD	.4–.63 AMP MOTOR PROTECTOR	G.E.	123CB
29	6	RL4RA040TJ	4 POLE RELAY 120V COIL	G.E.	202CR,213CR,223CR,228CR,233CR,243CR
30	2	BRLL20	AUX. CONTACT 2NO SIDE	G.E.	213CR
31	50	011511607	TERMINAL	ENTRELEC	TS
32	1	199–DR1	MOUNTING RAIL	A.B.	TS
33	2	BAM 2	END ANCHOR	ENTRELEC	TS
34					
35	1	CR151KCC01AM	FUSED TERMINAL	G.E.	250FU
36	1	FNM–2	2 AMP FUSE	BUSSMAN	250FU
37	2	253G–200C	DC MOTOR CONTROLLER	DART	136MD,140MD
38					
39	2	2 SFT–600	CURRENT TRANSFORMER	RAM METER	131CT,132CT
40	2	YE/250240LSNL	AMMETER	YOKOGAWA	131AM,132AM
41	1	GB14	GROUND BAR	SIEMENS	GB

BILL OF MATERIAL

MACHINE MODEL: JBC–11 **CUSTOMER:** G.E. CARIBE

NO.	QTY.	CATALOG NUMBER	DESCRIPTION	MANUFACTURER	SYMBOL
42	1	ECRP1006	HOUR METER	ROSLER	235HM
43	9	CR104PBT11G3S2	GREEN ILLUM. PUSHBUTTON	G.E.	[illegible]
44	8	CR104PBG01R2	RED EXTEND HEAD PUSHBUTTON	G.E.	[illegible]
45	2	CR104PSG21B91	2 POSITION SELECTOR SWITCH	G.E.	211SS,236SS
46	1	CR104PBT11M1S2	AMBER ILLUM. PUSHBUTTON	G.E.	237PL,238PB
47	1	CR104PSG74B91	3 POSITION SELECTOR SWITCH	G.E.	145SS
48	1	CR104PTY209301	RED MUSHROOM HEAD PUSHBUTTON	G.E.	205ES
49					
50					
51	4	CR104PXP06	5 KOHM POTENTIOMETER	G.E.	117MD,126MD,136MD,140MD
52					
53	1	CR104PSK21A91M	KEY SELECTOR SWITCH	G.E.	213SS
54	3	CR104PXC1F	1NO CONTACT BLOCK	G.E.	145SS,213SS,213SS
55					
56					
57	2	88865155	FLIP FLOP TIMER	CROUZET	216TD,248TD
58	1	88826103	MULTIFUNCTION TIMER	CROUZET	254TD
59					
60	1	EN63	DISTRIBUTION BLOCK	CUTLER HAMMER	103PDB
61					
62	1	FD160JCV1	FUSE COVER FOR DISCONNECT	G.E.	101DSC
63					
64	1	440R–N23119	120VAC SAFETY RELAY	A.B.	202SR

STANDARD TOLERANCES – UNLESS OTHERWISE NOTED

Fabrication in MM		Machining in Inches
≤500MM = ±1.0	≤2000MM = ±4.0	.0 = ±.020
≤1000MM = ±2.0	≤2500MM = ±5.0	.00 = ±.015
≤1500MM = ±3.0	>2500MM = ±6.0	.000 = ±.005
Cutting dimensions and Shearing ±1.0	Angles ±0° 30'	

THIS DRAWING AND THE INFORMATION CONTAINED THEREIN ARE OUR PROPERTY. ANY COPYING, TRANSMITTAL TO OTHERS, AND ANY USE IS PROHIBITED EXCEPT WITH OUR WRITTEN PERMISSION.

CHANGE NO.	CHANGES	DATE	NAME	CHECKED BY

	Name	Date
Drawn by	RJP	9/18/08
Checked by		
Inspected by		
Previous No.		
Scale	Projection	
NONE		

ROSLER Metal Finishing USA, LLC
401 Miles Drive, Adrian, Michigan 49221
(517) 263–0502 FAX (517) 263–0036

JBC–11

BILL OF MATERIAL

1 0 111 16 0057