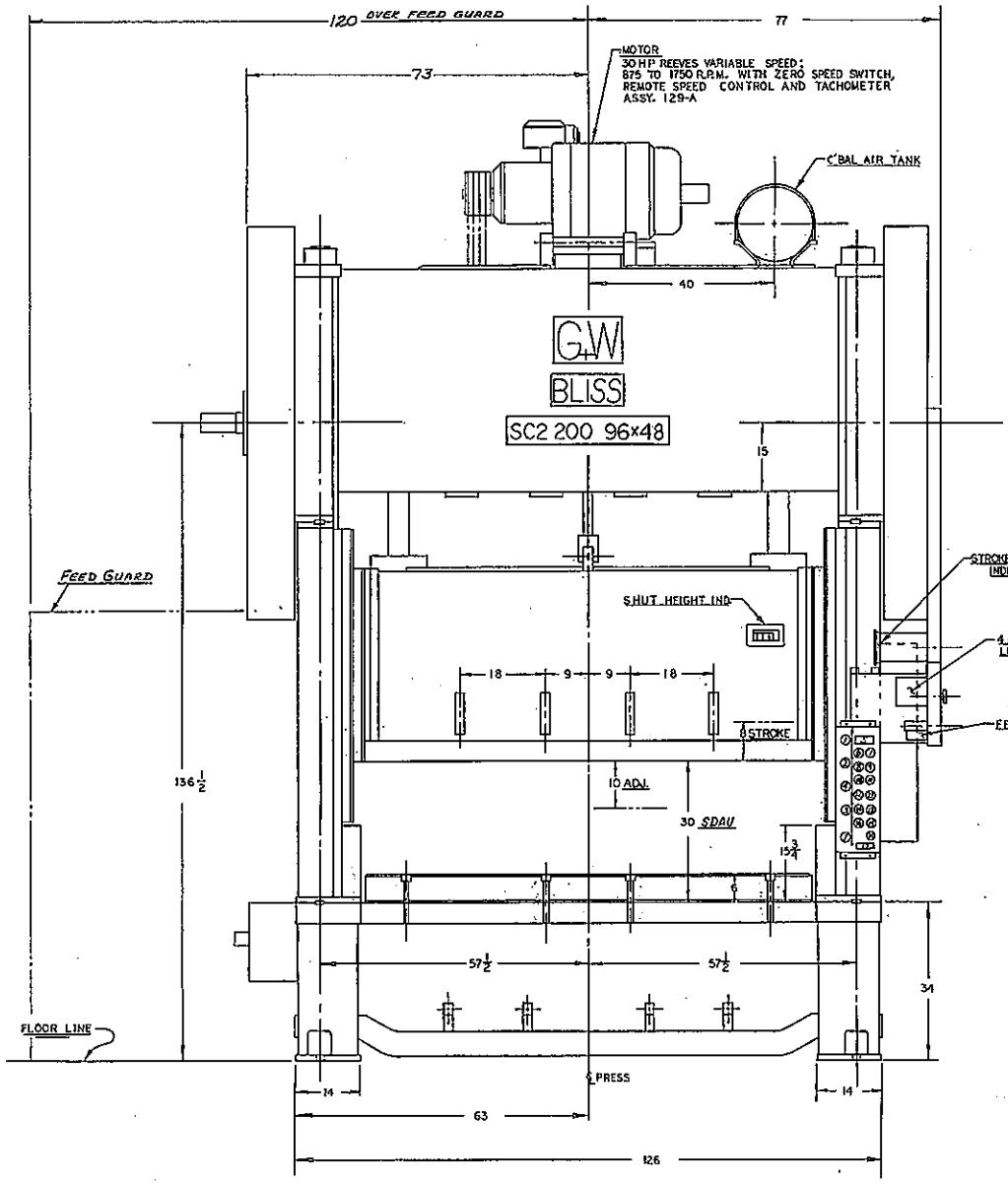

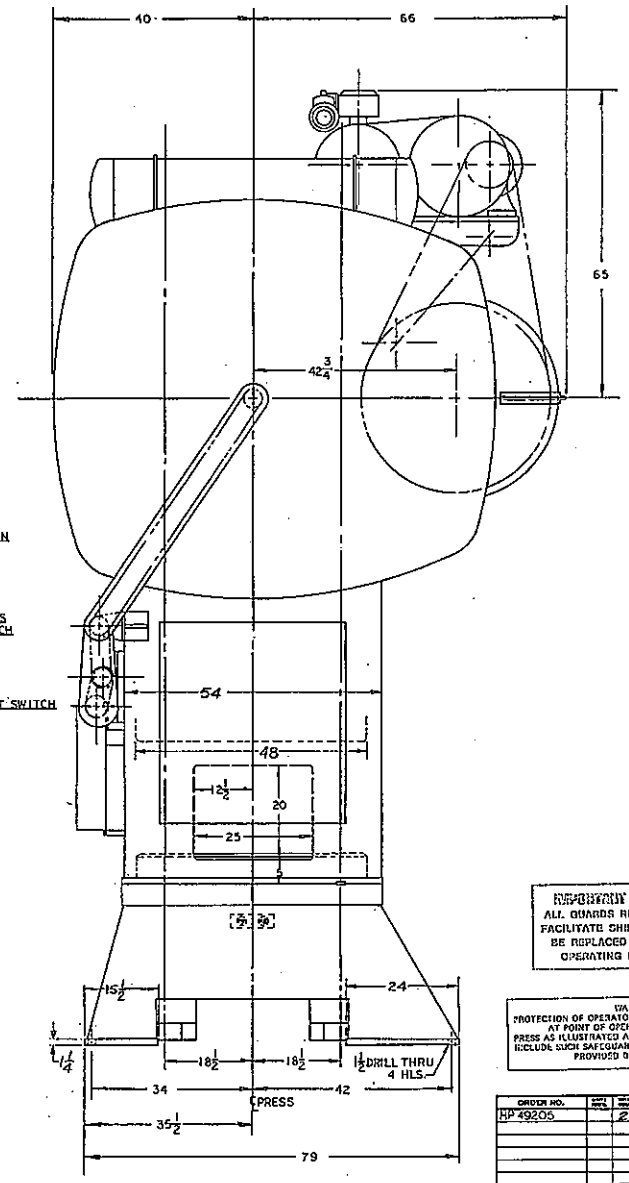

1. RUN-INCH
2. STOP
3. TOP
4. PRE-SET
5. TACH.
6. POWER-ON
7. SPEED ADJUST
8. LUBE ON-FAULT
9. LUBE LEVEL ACCEPT
10. RAISE
11. MAIN / MOTOR START
12. LOWER
13. MAIN / LUBE STOP
14. CLUTCH-SLIDE
15. FORWARD-REVERSE
16. RECOCK OFF-ON
17. OFF-INCH-SING-CONT
18. DETECTOR OUTLET-STOP
19. DETECTOR OUTLET-TOP STOP
20. ROLL RELEASE OFF-ON
21. LUBE MOTOR START

FLYWHEEL 40 OD 23 FACE 8 RIM
GEAR RATIO 5.840 TO 1
PRESS SPEED 35-70 SPM
PRESS STROKE 8
PRESS ADJUSTMENT 10

This Drawing and its Contents are the Proprietary Property of BLISS CLEARING NIAGARA, INC. and may only be used for the purpose it is provided for

IMPORTANT NOTICE!
ALL GUARDS REMOVED TO FACILITATE SHIPPING MUST BE REPLACED PRIOR TO OPERATING MACHINE

WARNING
PROTECTION OF OPERATOR REQUIRES SAFEGUARDING AT POINT OF OPERATION - DIE SPACE. PRESS AS ILLUSTRATED AND SUPPLIED DOES NOT INCLUDE SUCH SAFEGUARDING AND IS TO BE PROVIDED BY PRESS USER.

UNIT # 1

ORDER NO.			
HP 49205		2	

DO NOT SCALE DWG.
MAKE ALL SHOP CHECKS
DWN. DJA 12-22-72
CK. GCB
APP.
SCALE 1/12

E. W. BLISS
A Part of STANLEY WORKS & Affiliate Companies

SC 2 200 96x48
GENERAL ASSEMBLY
9650-D-1153

NO.	DESCRIPTIONS	DATE	BY
1	ELECT. CONTROLS REV. - W/I WAS MAIN/LUBE START; ADDE #21.	1-22-73	GCB

REVISIONS

MAY 21 2004

TOLERANCE ALLOWANCE
UNLESS OTHERWISE SPECIFIED
FRACTIONAL FINISH MACHINED ± 1/64
DECIMAL FINISH MACHINED ± .005

306