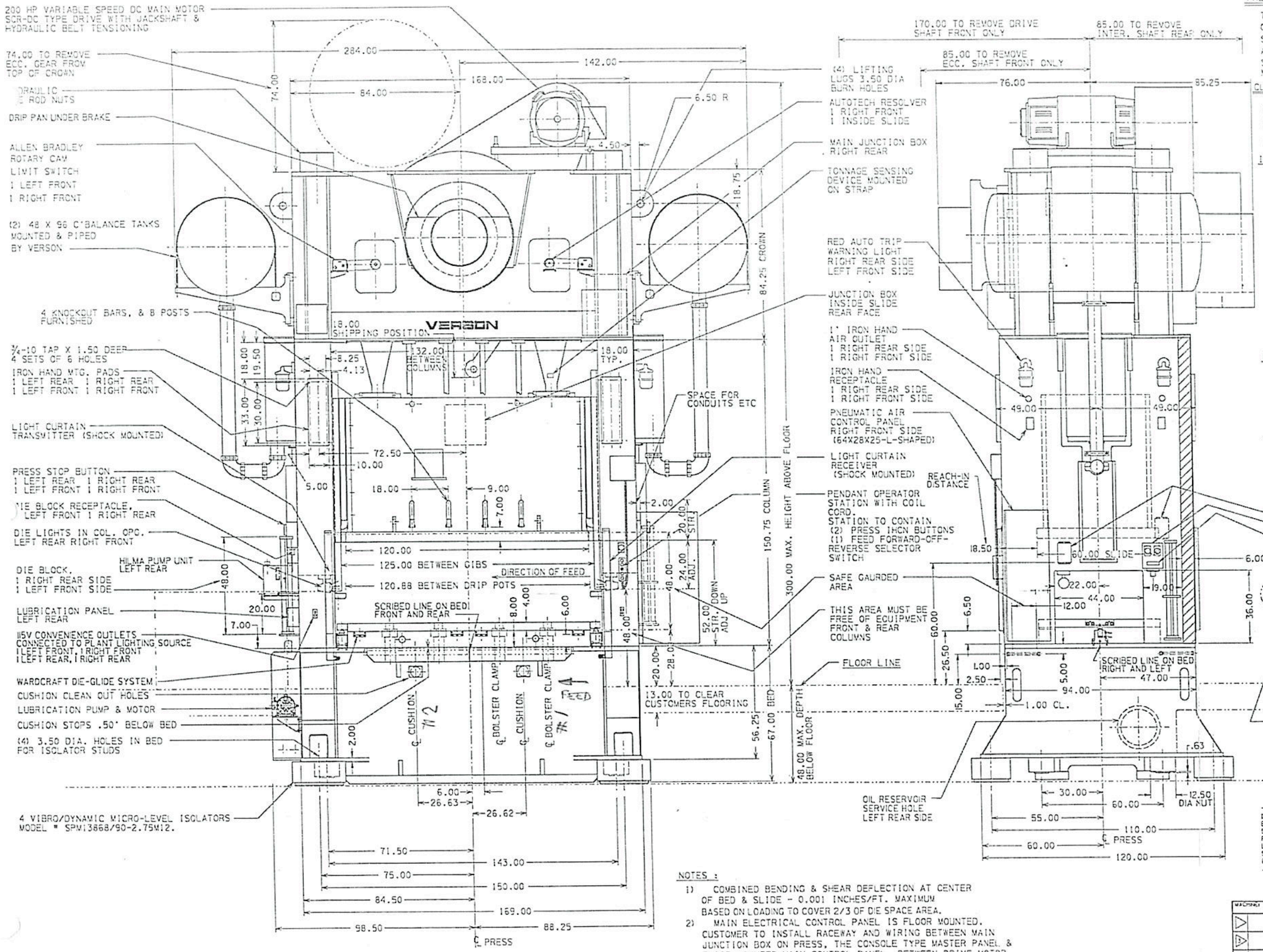

PRESS SPECIFICATION : #29191

TYPE OF PRESS - VERSON S4-800-120-60T
CAPACITY OF PRESS AT 1/2" UP = 800 TONS @ 20 SPM
STROKE OF PRESS = 20 INCHES
ADJUSTMENT OF SLIDE (POWER) = 24" (ADJ SPEED 4 IN/MIN)
STROKES PER MINUTE = 10 TO 40
MAX. SINGLE STROKES - 26 SPM WITH PRESS SPEED @ 33 SPM

CUSHION SPECIFICATION : #29193

TYPE OF CUSHION = (2) VERSON U38-12
COMBINED CAPACITY = 113.4 TONS @ 100 PSI
CAPACITY EACH = 56.7 TONS @ 100 PSI
WORKING STROKE = 8 INCHES
COLLAPSED STROKE = 12 INCHES

INDIVIDUAL ASSEMBLY WEIGHTS :

CROWN ASSEMBLY INCLUDING	100,000#
MAIN MOTOR ASS'Y 4,100#	
ECC.GEAR ASS'Y . 2 @ 11,600# EA.	
FLYWHEEL ASS'Y 27,000#	
SLIDE ASSEMBLY	43,800#
COLUMNS	25,600#
BED ASSEMBLY INCLUDING	89,200#
CUSHION ASSEMBLY 2 @ 8,550# EA.	
BOLSTER	15,400#
BOLSTER ADAPTER PL. 2 @ 6,915#	13,830#
TIE RODS & NUTS	15,300#
TANKS & PIPES	5,500#
ELECTRICAL EQUIPMENT	5,000#
MISCELLANEOUS	1,000#
TOTAL PRESS WEIGHT =	300,930#

PRESS ELECTRICAL SERVICE REQUIRMENTS :

LINE VOLTAGE = 460 VOLTS.
PHASE & CYCLE = 3 Φ - 60 HZ.
MAIN MOTOR H.P. = 200 HP. ADJ. SPEED
SLIDE MOTOR H.P. = 15 HP.
LUBRICATION MOTOR H.P. = 5 HP.

PRESS AIR SERVICE REQUIRMENTS :

COUNTERBALANCE SUPPLY PIPE SIZE = 1"
FLYWHEEL BRAKE SUPPLY LINE = "
CLUTCH SUPPLY PIPE SIZE = 1"
CLUTCH AIR CONSUMPTION PER ENGAGEMENT = 0.656 CU. FT. OF FREE AIR @ 70 PSIG
BRAKE AIR CONSUMPTION PER ENGAGEMENT = 0.1084 CU. FT. OF FREE AIR @ 70 PSIG

NOTES :

1) COMBINED BENDING & SHEAR DEFLECTION AT CENTER OF BED & SLIDE - 0.001 INCHES/FT. MAXIMUM BASED ON LOADING TO COVER 2/3 OF DIE SPACE AREA.
2) MAIN ELECTRICAL CONTROL PANEL IS FLOOR MOUNTED. CUSTOMER TO INSTALL RACEWAY AND WIRING BETWEEN MAIN JUNCTION BOX ON PRESS, THE CONSOLE TYPE MASTER PANEL & FLOOR MOUNTED MAIN CONTROL PANEL, BETWEEN DRIVE MOTOR & MAIN CONTROL PANEL
3) PRESS WILL BE SHIPPED DISASSEMBLED
4) SLIDE FACE & BOLSTER ADAPTER PLATE DRILLED & 'T' SLOTTED TO JIC SPECIFICATIONS.

ATTENTION

IT IS THE USERS RESPONSIBILITY TO PROVIDE EFFECTIVE MEANS TO PROTECT PEOPLE FROM DIE SPACE HAZARD, AND USE, MAINTAIN, AND UP-DATE PRESSES AND DIES IN ACCORDANCE WITH THE LATEST REVISION OF THE AMERICAN NATIONAL STANDARDS INSTITUTE SAFETY STANDARDS B11.1, B11.2, OR B11.3.

MACHINE	S4-800-120-60T	ASSEM. NO.	80.00
CHK'D.	8-10-94	A. SCHWARZ	
DRN.	8-10-94	A. SCHWARZ	
DES.			
TITLE	GENERAL ASSEMBLY	PART NO.	29191-4001
SHT. 1 OF 3	SCALE = 1/5" = 1"		

INFORMATION DISCLOSED HEREIN IS THE PROPERTY OF VERSON. THIS DRAWING IS ISSUED FOR ENGINEERING INFORMATION ONLY. RECEIPT OR POSSESSION OF THIS DRAWING DOES NOT CONVEY ANY RIGHTS TO COMMUNICATE OR REPRODUCE, OR TO MANUFACTURE, USE, OR SELL ANYTHING DISCLOSED HEREIN, WITHOUT WRITTEN PERMISSION OF AN OFFICER OF VERSON.

VERSON
A DIVISION OF ALLEGHENY PRODUCTS CORPORATION
CHICAGO, ILLINOIS

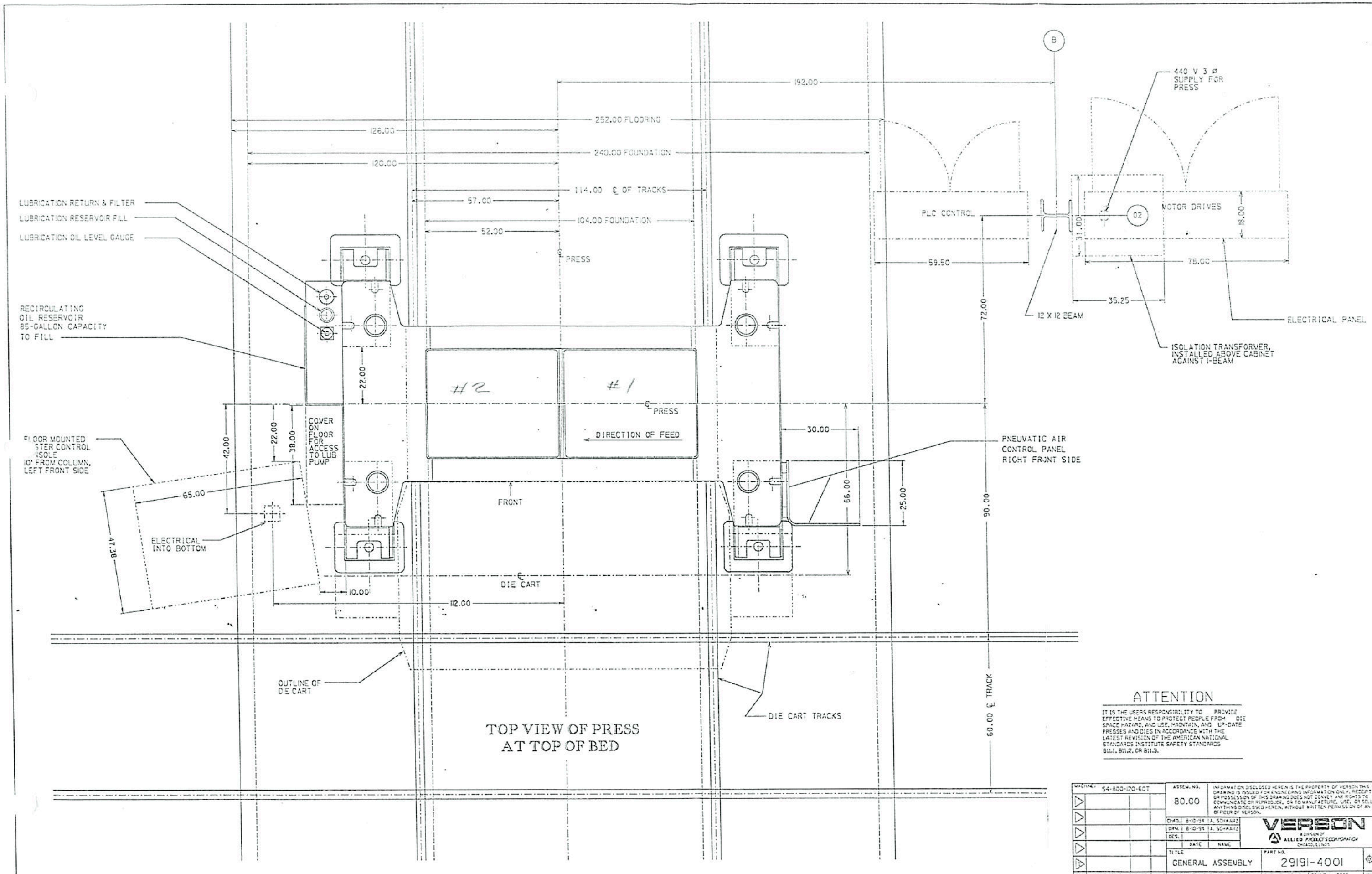

TOP VIEW OF PRESS
AT TOP OF BED

ATTENTION

IT IS THE USERS RESPONSIBILITY TO PROVIDE EFFECTIVE MEANS TO PROTECT PEOPLE FROM DIE SPACE HAZARD, AND USE, MAINTAIN, AND UP-DATE PRESSES AND DIES IN ACCORDANCE WITH THE LATEST REVISION OF THE AMERICAN NATIONAL STANDARDS INSTITUTE SAFETY STANDARDS B11.1, B11.2, OR B11.3.

MACHINE: S4-800-120-60T	ASSEM. NO. 80.00	INFORMATION DISCLOSED HEREIN IS THE PROPERTY OF VERSON. THIS DRAWING IS ISSUED FOR ENGINEERING INFORMATION ONLY. RECEIPT OR POSSESSION OF THIS DRAWING DOES NOT CONVEY ANY RIGHTS TO COMMUNICATE OR REPRODUCE, OR TO MANUFACTURE, USE, OR SELL ANYTHING DISCLOSED HEREIN, WITHOUT WRITTEN PERMISSION OF AN OFFICER OF VERSON.	
	CHKD. 8-10-94 A. SCHWARZ	VERSON A DIVISION OF ALLIED PRODUCTS CORPORATION CHICAGO, ILLINOIS	
	DRN. 8-10-94 A. SCHWARZ		
	DES.		
	DATE NAME		
	TITLE GENERAL ASSEMBLY	PART NO. 29191-4001	
SYM MODIFICATION DATE NAME	REPRO. OF 29191-4001	SHT. 2 OF 3 SCALE: .0625	

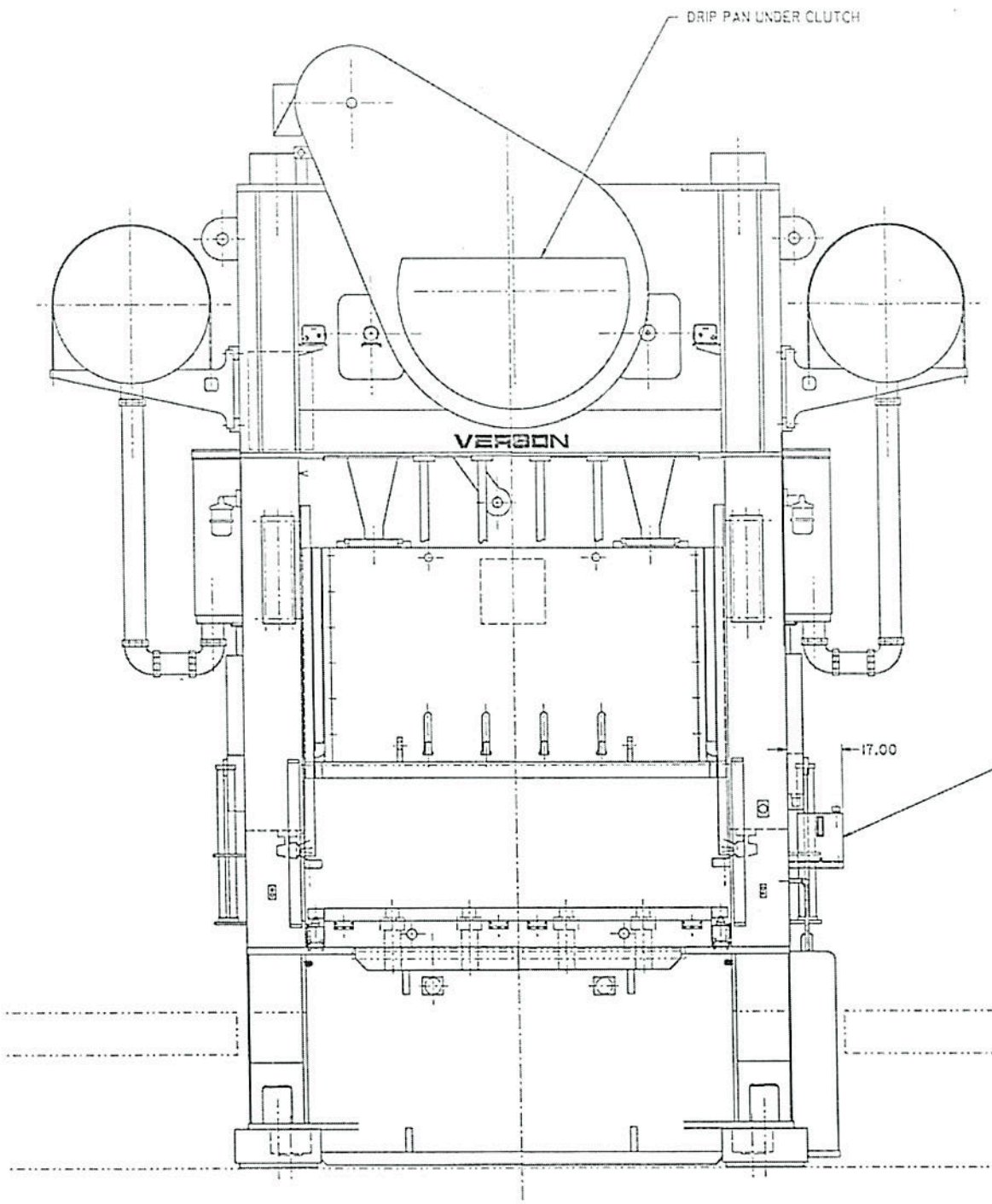

REAR VIEW

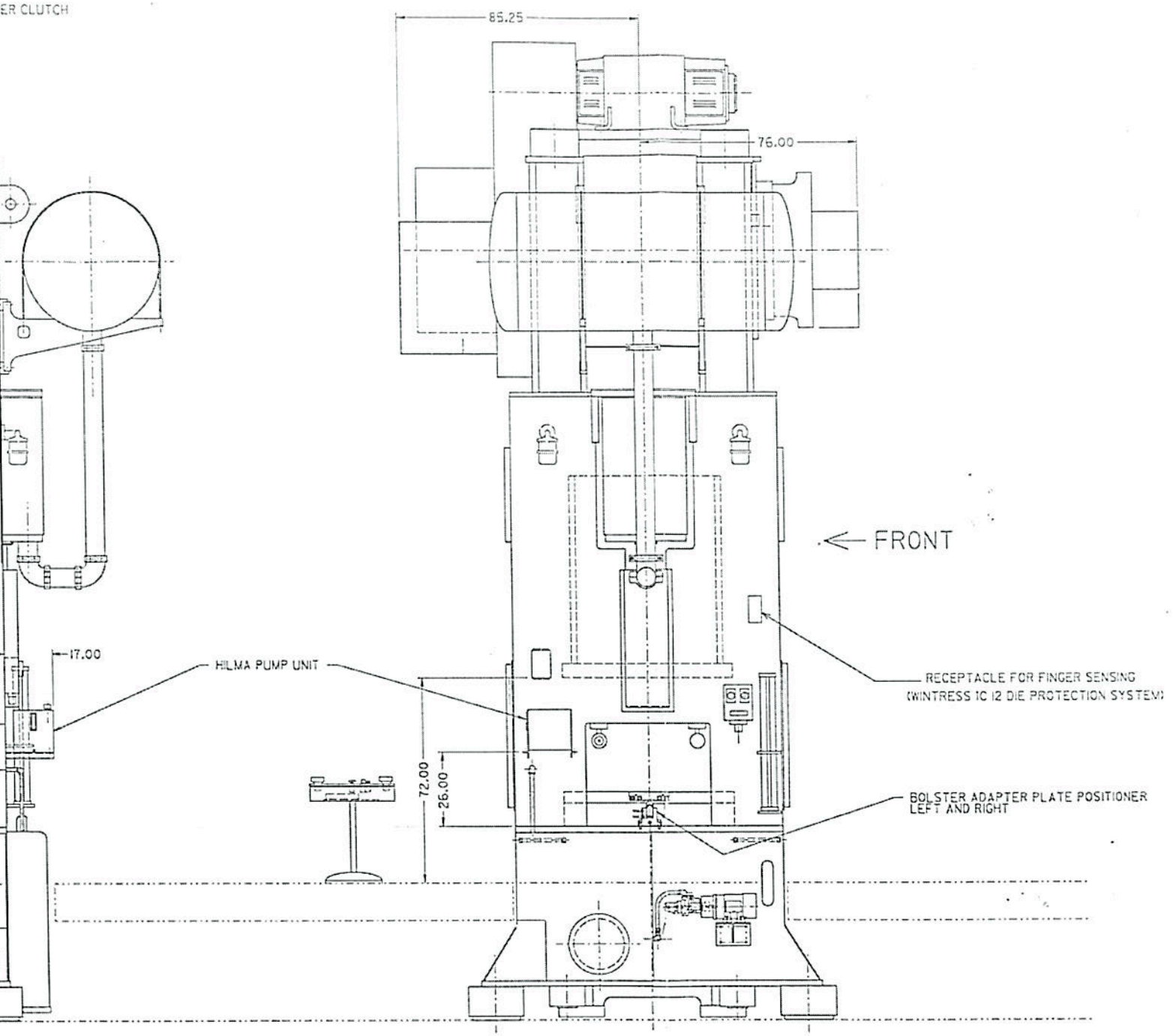

L.H. VIEW

MACHINE	S4-800-H20-60T			ASSEM. NO.	80.00
				CHKD.	8-10-94 A. SCHWARZ
				DRN.	8-10-94 A. SCHWARZ
				DES.	
					DATE NAME
SYM	MODIFICATION	DATE	NAME	TITLE	GENERAL ASSEMBLY
	ADDED SHEET 3 OF 3	9/26 90	T.T	REPRO. OF 29191-4001	

INFORMATION DISCLOSED HEREIN IS THE PROPERTY OF VERSON. THIS DRAWING IS ISSUED FOR ENGINEERING INFORMATION ONLY. RECEIPT OR POSSESSION OF THIS DRAWING DOES NOT CONVEY ANY RIGHTS TO COMMUNICATE OR REPRODUCE, OR TO MANUFACTURE, USE, OR SELL ANYTHING DISCLOSED HEREIN, WITHOUT WRITTEN PERMISSION OF AN OFFICER OF VERSON.

VERSON
A DIVISION OF ALLIED PRODUCTS CORPORATION
CHICAGO, ILLINOIS

PART NO. 29191-4001

SHT. 3 OF 3 | SCALE: 1/8" = 1'-0"