INBOARD SIDE

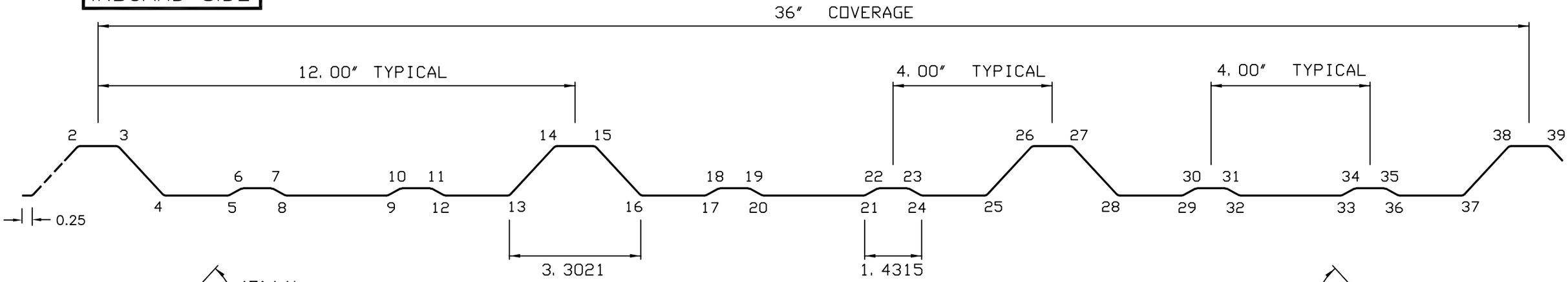

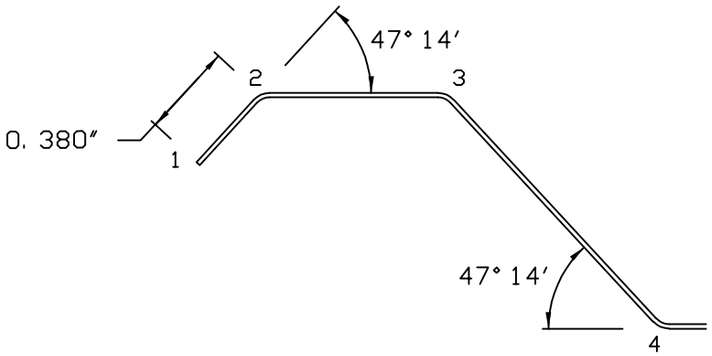

INBOARD RIB DETAIL NO BEARING LEG

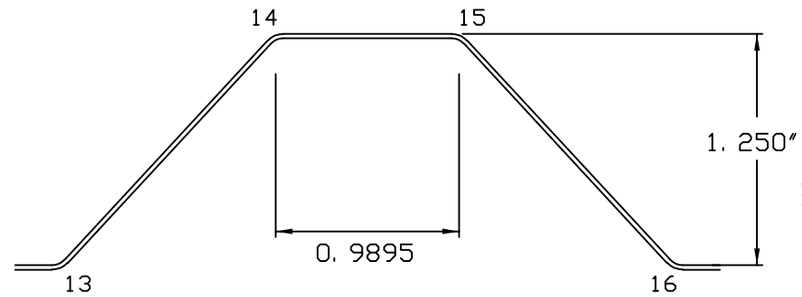

CENTER RIB DETAILS AND
INBOARD DETAIL WHEN RUN BEARING LEG

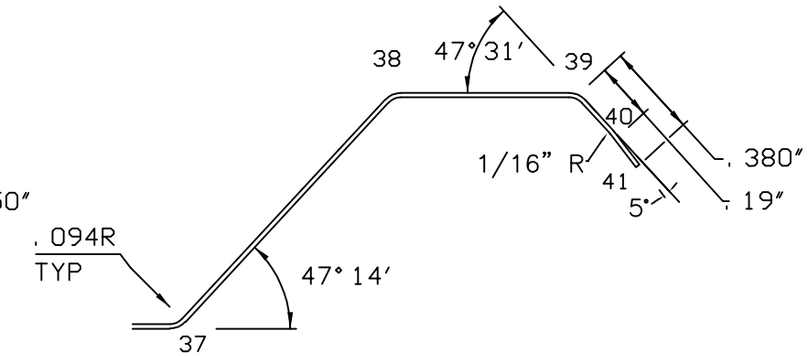

OVERLAP RIB DETAIL OUTBOARD SIDE

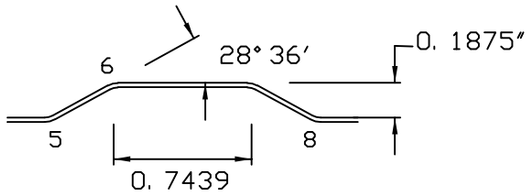

MINOR RIB DETAIL

OVERBENDS					
Str	Corner	Str	Corner	Str	Corner
4	18, 19, 22, 23	5	17, 20, 21, 24	6	16, 25
7	15, 26	8	14, 27	9	13, 28
11	6, 7, 10, 11	11	30, 31, 34, 35	12	5, 8, 9, 12
12	29, 32, 33, 36	12	4, 37	13	2, 3, 38, 39, 40

WITH/BRG LEG, COIL WIDTH: 43" @ t= .024"
WO/BRG LEG, COIL WIDTH: 41-1/2" @ t= .024"
METAL THICKNESS RANGE: .019 - .026
GRADE OF MATERIAL: D and E

This drawing contains proprietary information of ASC Machine Tools which may not be utilized in any manner without the written consent thereof. © COPYRIGHT

A. S. C. MACHINE TOOLS, INC.
SPOKANE, WASHINGTON

ASC - R-PANEL, PBL
MOUNTAIN METALS MFG / DANVILLE KY

03/12/04		PR18662	TP - 1430
PS285.DWG	0.332		

TOLERANCE STANDARDS FOR THICKEST METAL:
*ACCUMULATION - (+ or -) 1/16in
DEPTH -------- (+ or -) 1/32in
RADII -------- (+ or -) 1/32in
ANGLES-------- (+ or -) 2 degrees
CAMBER ------- 1/8in in 10ft
SKI ---------- 1/8in in 10ft
DIVE --------- 1/8in in 10ft
*NET VARIATION FOR COMBINED DIMENSIONS

ALL DIMENSIONS ARE BOTTOM OF SHEET INTERCEPTS (U.O.N.).
ALL FORMING RADII ARE 0.094 UNLESS OTHERWISE NOTED