CUSTOMER: STOCK PRESS

MOD. NO:.....SC2-400-108-54
SERIAL NO:.....SDG-400-409-97

BED AREA:.....108" L.-R. x 54" F.-B.
RAM AREA:.....108" L.-R. x 54" F.-B.
PRESS STROKE:.....10"
RAM ADJUSTMENT:.....12"
SHUT HT. RAM TO BOLSTER (SDAU):....28"
PRESS SPEED:.....20 - 60 SPM
AVAILABLE ENERGY.. 158 INCH TONS @ 25 SPM
APPROX. OVERALL WT:.....148 000 lbs

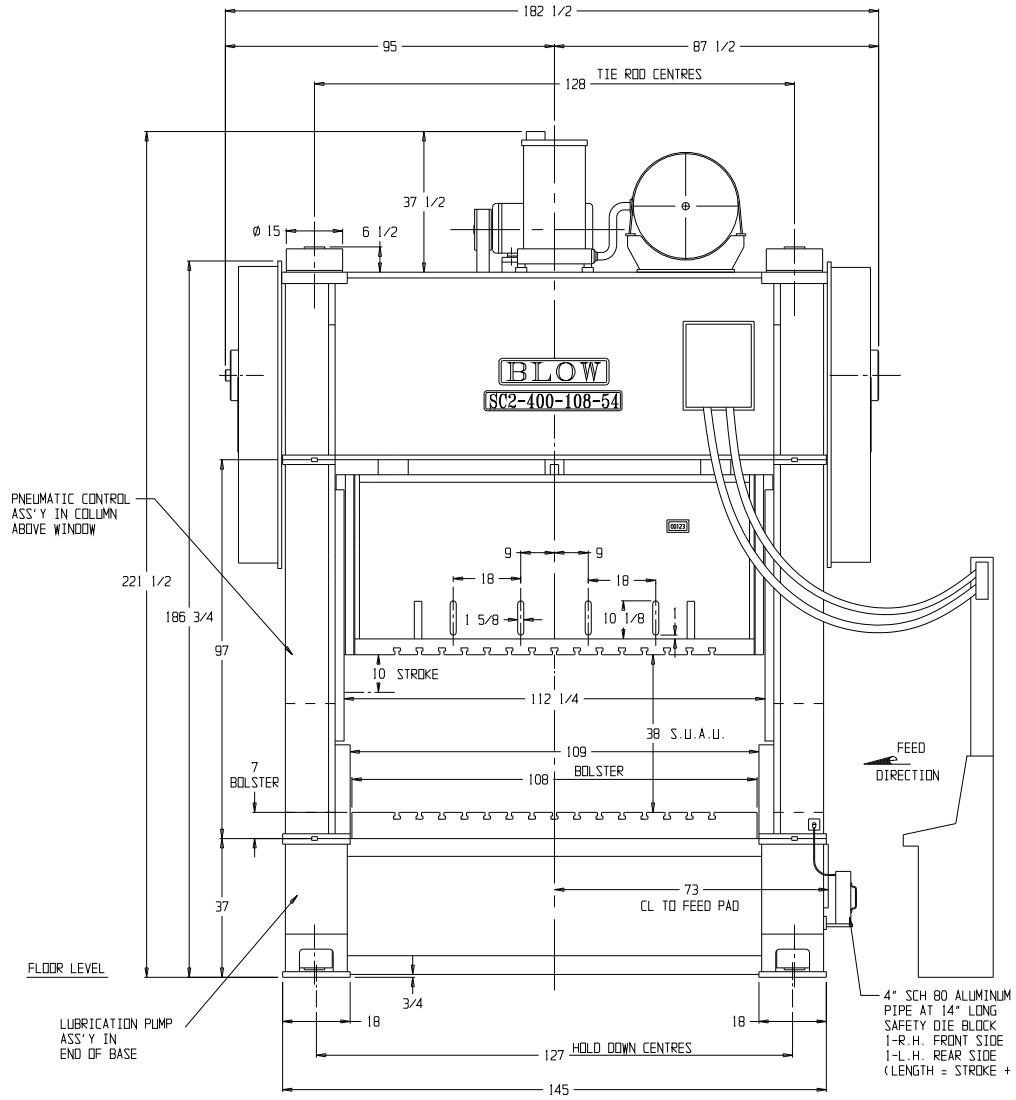

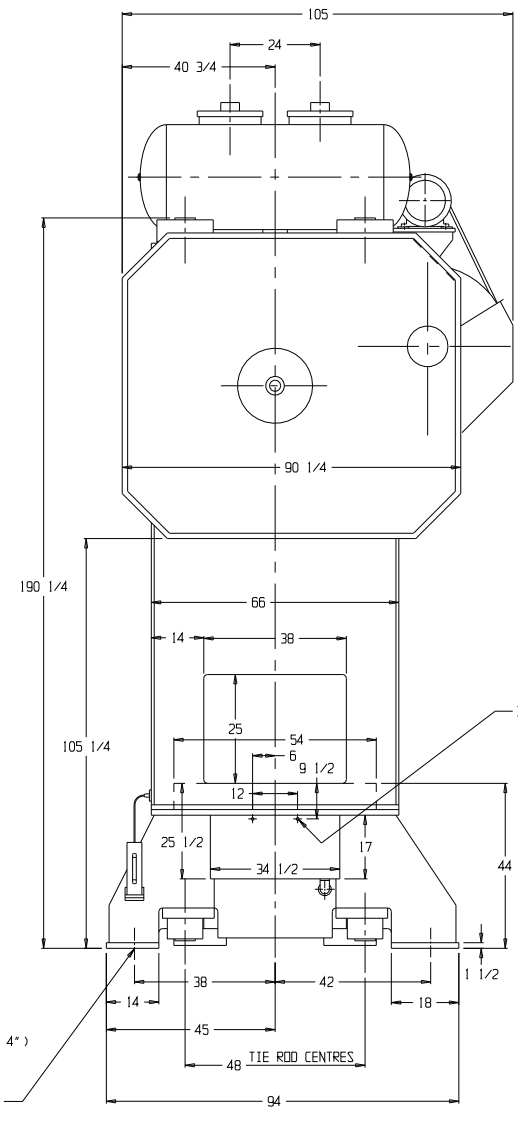

PLOT SCALE:0.040

DO NOT SCALE DRAWING

UNLESS OTHERWISE SPECIFIED:
MACHINED SURFACE TOLERANCES:
ALL 3 PLACE DECIMALS: +/- .005
ALL FRACTIONAL DIM'S. TO MACHINED SURFACES: +/- .015
FRACTIONAL TOLERANCES:
UNDER 5 FEET: +/- 1/16
OVER 5 FEET: +/- 1/8

DRAWN BY: R.A.	DATE: OCT. 22, 1996
CHECKED BY:	DATE:
SCALE: NOT TO SCALE	MADE FROM:0068-C-0056

THIS PRINT IS THE PROPERTY OF BLOW PRESS LTD. AND IS LOANED TO YOU SUBJECT TO RETURN ON DEMAND. UNLESS OTHERWISE AGREED TO IN WRITING BY BLOW PRESS LTD. ITS CONTENTS ARE CONFIDENTIAL AND MUST NOT BE REPRODUCED OR COPIED IN WHOLE OR IN PART OR SUBMITTED TO ANY THIRD PARTY FOR USE OR EXAMINATION.

BLOW PRESS LIMITED
GUELPH ONTARIO

DESCRIPTION:
SC2-400-108-54

DRAWING NAME:
GENERAL ASS'Y

DRAWING NUMBER: 0068-C-0060 RA 36 REV

REVISIONS:

PRESS CODE:729