| ITEM | DESCRIPTION | REQ'D. |
|---|---|---|

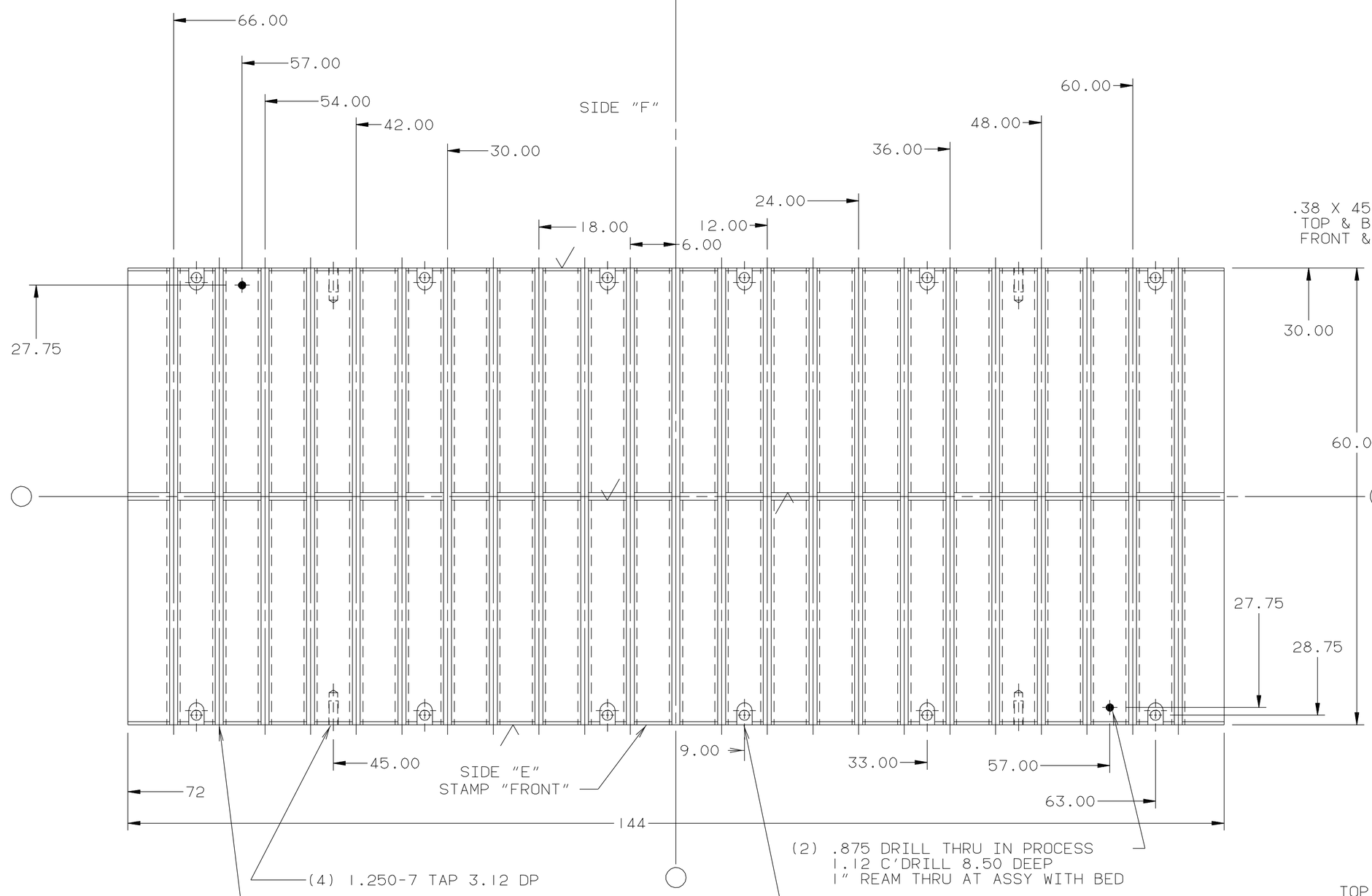


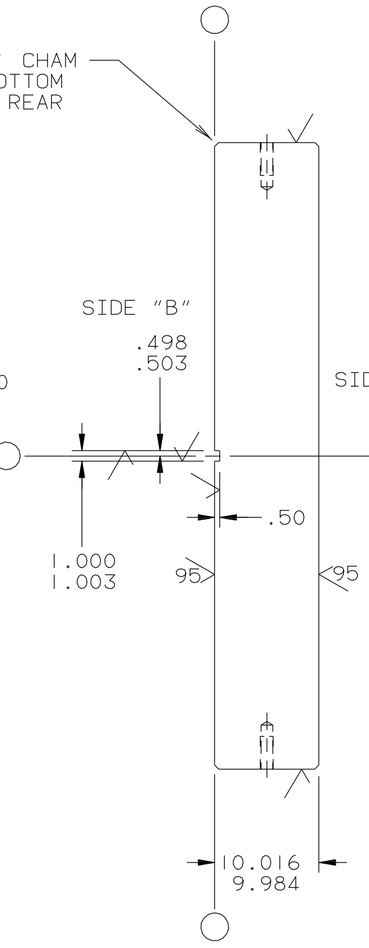


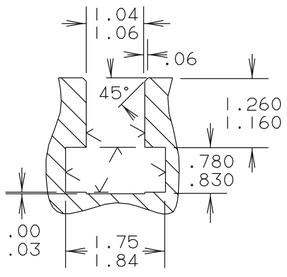


(23) TEE SLOTS

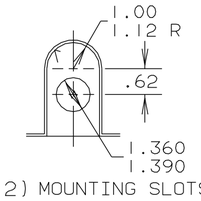


(12) MOUNTING SLOTS

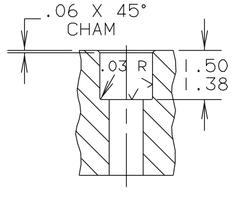


TOP AND BOTTOM SURFACES MUST BE PARALLEL WITHIN .001" ON EACH CORNER. VARIATION IN THICKNESS NOT TO EXCEED .001" FOR WIDTHS UP TO 20" AND .002" IN ANY 60" LENGTH. TOP AND BOTTOM SURFACES TO BE FLAT WITHIN .001" IN ANY 60" LENGTH.

STRESS RELIEVE BEFORE MACHINING

| EST. WEIGHT | RAW MATERIAL WEIGHT |
|---|---|
| 24365 LBS | |
| GROUP TECH NO. | |
| E2-800-144-4 | |
| REFERENCE NO. | |
| 1209-465 | |
| SUPERSEDED BY | |
| SUPERSEDES | |
| PATTERN FILE NO. | |
| PATTERN BASIC NO. | |

| MACHINED SURFACES UNLESS OTHERWISE SPECIFIED | |
|---|---|
| DIMENSION | TOLERANCE ± |
| X AND X.X | 0.100 |
| X.XX | 0.010 |
| X.XXX | 0.001 |
| X.XXXX | 0.0005 |
| FINISH 125 MICROINCHES | |
| BREAK SHARP CORNERS 0.03 | |
| ⊥ .015 ∠ .015 // .015 | |

**THE MINSTER MACHINE CO.**

MINSTER, OHIO

LAST REV. DATE: 5-18-98
REV. LEVEL: 001
CHANGED BY: FJW

©1998 THE MINSTER MACHINE COMPANY. THIS DOCUMENT IS THE EXCLUSIVE PROPERTY OF THE MINSTER MACHINE COMPANY. ANY DISCLOSURE, DISTRIBUTION AND/OR REPRODUCTION WITHOUT THE EXPRESS WRITTEN CONSENT OF THE MINSTER MACHINE COMPANY IS PROHIBITED. ALL RIGHTS RESERVED.

| DATE | DRAWN BY | CHECKED BY | SCALE |
|---|---|---|---|
| 4-1-98 | FJW | FJW | .09375 |

NAME OF PART: PLATE, BOLSTER

MATERIAL: HR1020

PATT. NO.:

NO. REQ'D.: ONE

C

PART NO.: 1209-845