ITEM	DESCRIPTION	REQ'D.

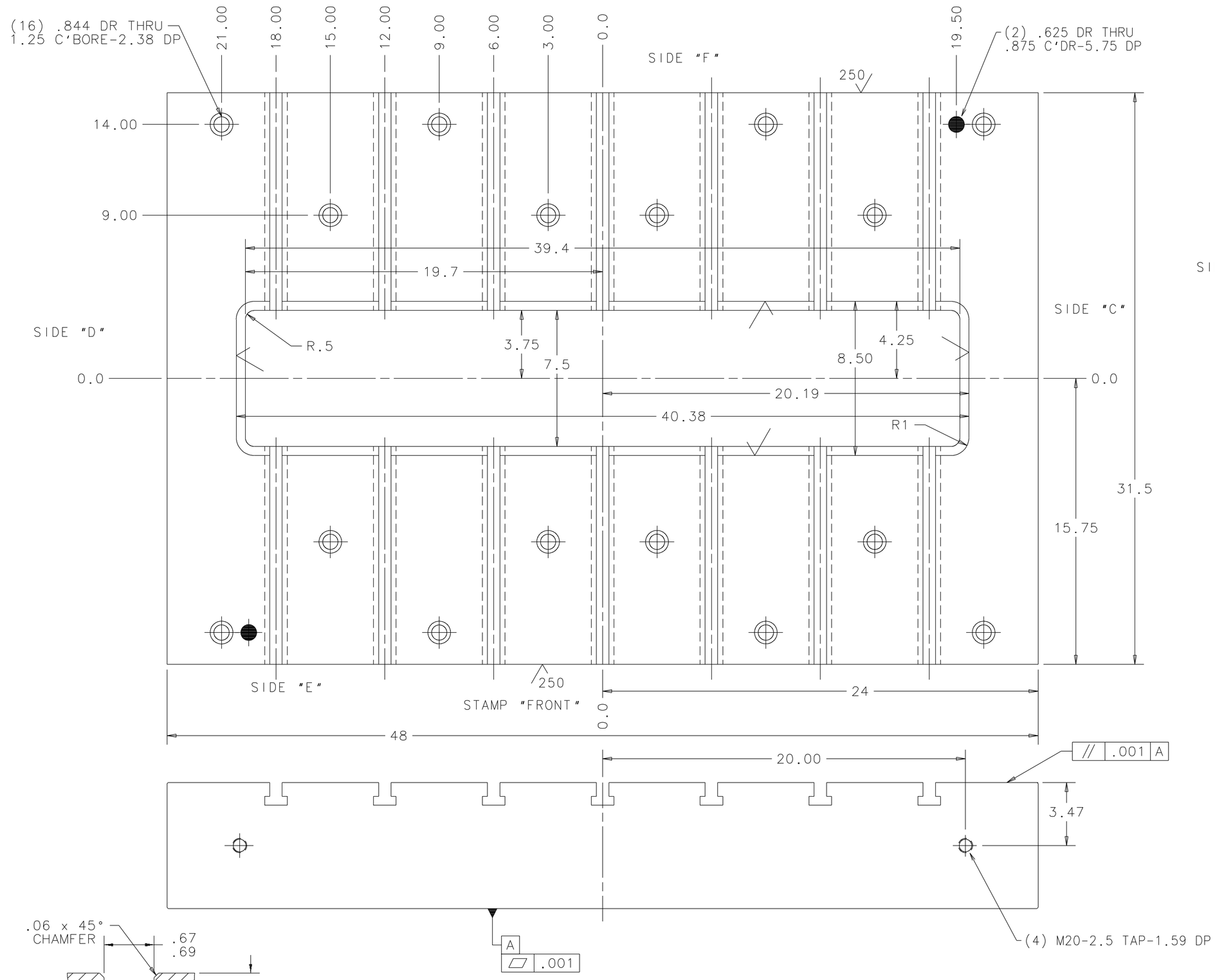

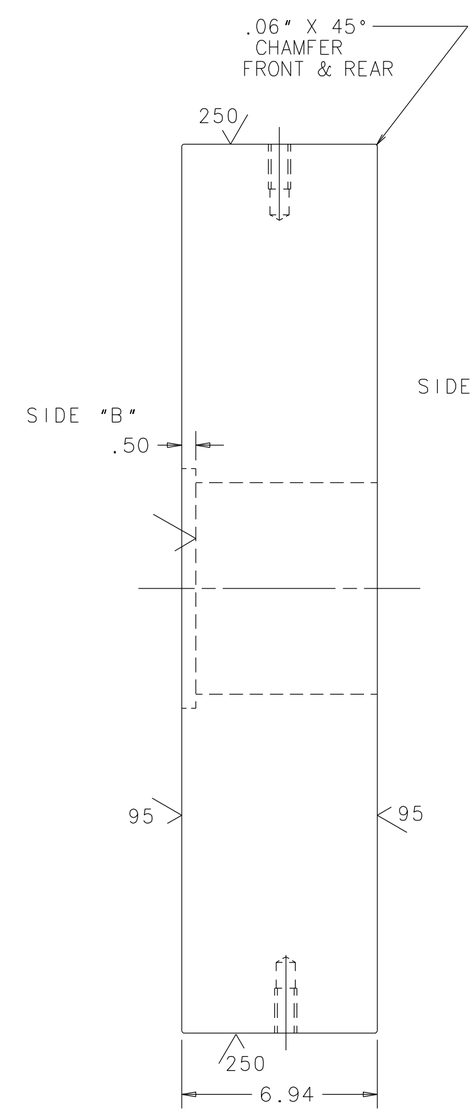

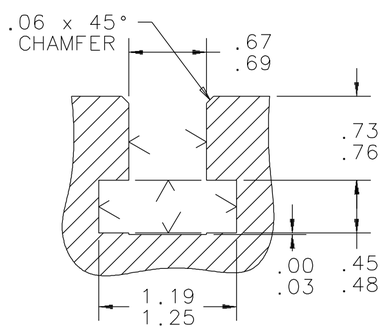

TOLERANCES UNLESS OTHERWISE SPECIFIED MACHINING X AND X.X ±.100 X.XX ±.010 X.XXX ±.001 X.XXXX ±.0005	THE MINSTER MACHINE CO. MINSTER, OHIO U.S.A.	SUPERSEDES	DRAWING DATE 2000-03-17
	©THE MINSTER MACHINE CO. THIS DOCUMENT IS THE EXCLUSIVE PROPERTY OF THE MINSTER MACHINE CO. ANY DISCLOSURE, DISTRIBUTION AND/OR REPRODUCTION WITHOUT THE EXPRESS WRITTEN CONSENT OF THE MINSTER MACHINE COMPANY IS PROHIBITED. ALL RIGHTS RESERVED.	SUPERSEDED BY	DRAWN BY FCB
		PATTERN PART NUMBER 4014-649	CHECKED BY FCB
	PART NAME PLATE, BOLSTER	ESTIMATED WEIGHT 2000 LBS	LAST REVISED BY
CLASS 2B THDS (INCH) CLASS 6H THDS (MM)	.62 T-SLOTS	MATERIAL M1B	LAST REVISION DATE
FINISH 125 MICROINCHES BREAK SHARP CORNERS .03	REFERENCE NUMBER 6057-771	DRAWING SCALE .25	REVISION LEVEL 000
//.015 ∠.015 ⊥.015	GROUP TECH. NUMBER P2H , 100 , 48 , 4 , 002 , C	SHEET NO. 1 / 1 OF SHEETS	PART NUMBER 1218-228