ITEM	DESCRIPTION	REQ'D.

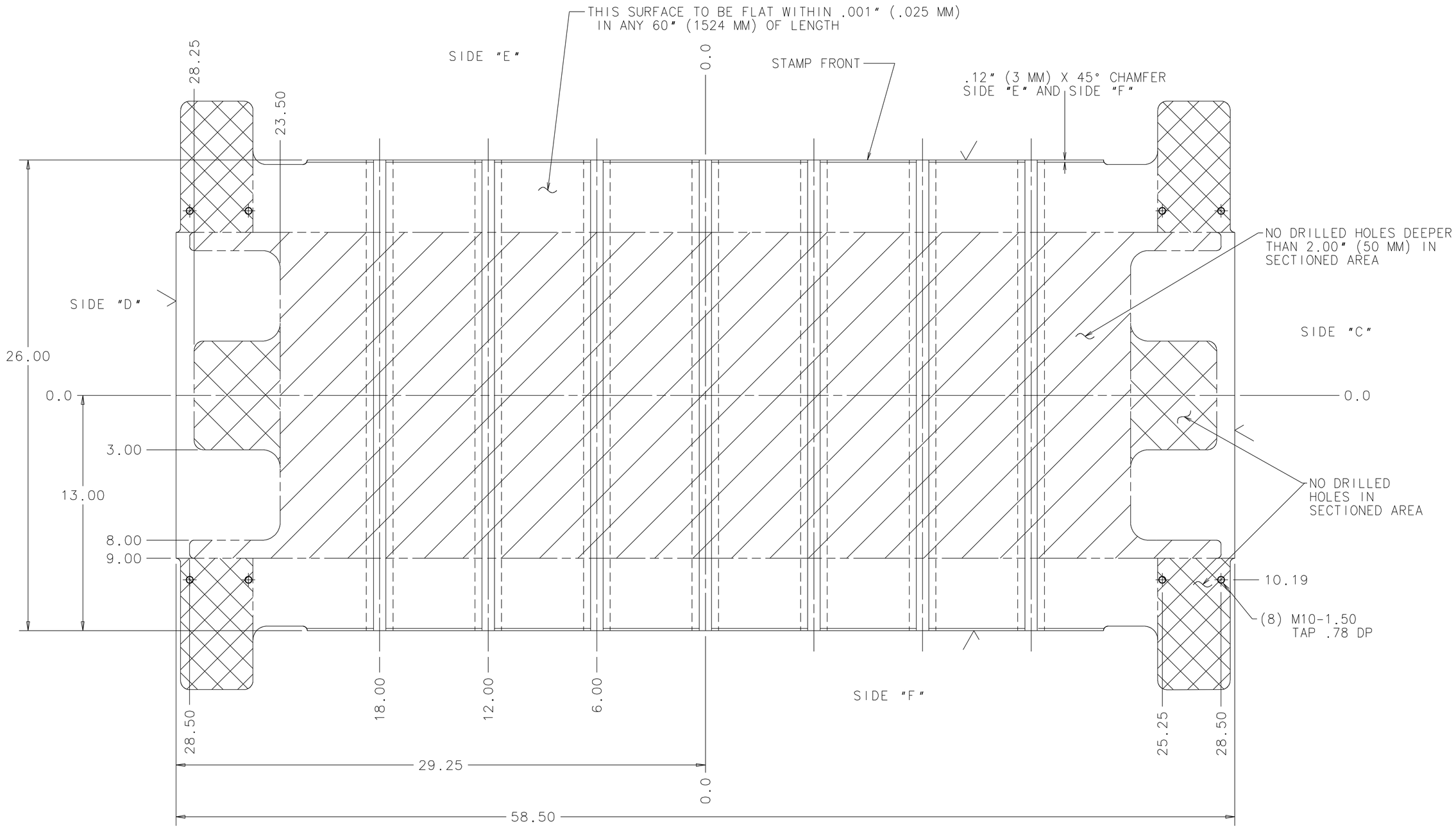

BOTTOM VIEW OF SLIDE
2.31" (59 MM) THICK FLANGE

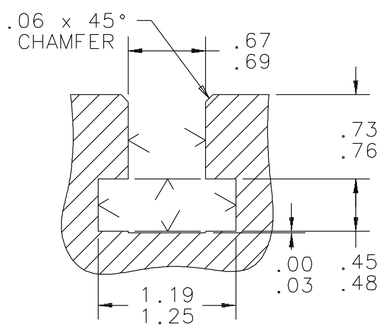

TOLERANCES UNLESS OTHERWISE SPECIFIED MACHINING X AND X.X ±.100 X.XX ±.010 X.XXX ±.001 X.XXXX ±.0005 CLASS 2B THDS (INCH) CLASS 6H THDS (MM) FINISH 125 MICROINCHES BREAK SHARP CORNERS .03 //.015 ∠.015 ⊥.015	THE MINSTER MACHINE CO. MINSTER, OHIO U.S.A. ©THE MINSTER MACHINE CO. THIS DOCUMENT IS THE EXCLUSIVE PROPERTY OF THE MINSTER MACHINE CO. ANY DISCLOSURE, DISTRIBUTION AND/OR REPRODUCTION WITHOUT THE EXPRESS WRITTEN CONSENT OF THE MINSTER MACHINE COMPANY IS PROHIBITED. ALL RIGHTS RESERVED. PART NAME ARRGT, PLAN VIEW DIE MTG .62" T-SLOTS REFERENCE NUMBER 6068-403 GROUP TECH. NUMBER P2H , 100 , 48 , 2002 , 004 , C	SUPERSEDES SUPERSEDED BY PATTERN PART NUMBER ESTIMATED WEIGHT MATERIAL DRAWING SCALE .25 SHEET NO. 1 / 1 OF SHEETS	DRAWING DATE 2000-03-17 DRAWN BY FCB CHECKED BY FCB LAST REVISED BY LAST REVISION DATE REVISION LEVEL 000 PART NUMBER 1218-227